The magnetometer system for the neutron electric dipole moment (nEDM) experiment at LANL

Yi (Jennie) Chen 陳宜

Indiana University

nEDM2021 workshop, Les Houches

February 18, 2021

Collaboration: neutron Electric Dipole Moment experiment at Los Alamos National Laboratory (nEDM@LANL)

Hg-199 as the co-magnetometer

$$\omega_1 - \omega_2 = \frac{4dE}{\hbar}$$

$$\frac{4d_nE}{\hbar} = \langle\omega_{Hg}\rangle(R_+ - R_-)$$

ELSEVIER

Nuclear Instruments and Methods in Physics Research A 404 (1998) 381–393

NUCLEAR INSTRUMENTS & METHODS IN PHYSICS RESEARCH Section A

Performance of an atomic mercury magnetometer in the neutron EDM experiment

K. Green[a], P.G. Harris[a,*,1], P. Iaydjiev[a,2], D.J.R. May[b], J.M. Pendlebury[b], K.F. Smith[b], M. van der Grinten[b], P. Geltenbort[c], S. Ivanov[d]

[a] *Rutherford Appleton Laboratory, Chilton, Didcot, Oxon OX11 0QX, UK*
[b] *University of Sussex, Falmer, Brighton BN1 9QH, UK*
[c] *Institut Laue-Langevin, BP 156, F-38042 Grenoble Cedex 9, France*
[d] *St. Petersburg Nuclear Physics Institute, Russia*

Received 15 September 1997

$$R_\pm = \frac{f_\mathrm{n}}{f_\mathrm{Hg}} = \left|\frac{\gamma_\mathrm{n}}{\gamma_\mathrm{Hg}}\right| \left(1 \underbrace{\pm\,\delta_\mathrm{EDM} \pm\, \delta_\mathrm{EDM}^\mathrm{false} + \delta_\mathrm{Q}}_{\text{E-field}} \underbrace{+\delta_\mathrm{G} \;+\delta_\mathrm{T}}_{\text{B-field}} \underbrace{+\,\delta_\mathrm{E} + \delta_\mathrm{LS} + \delta_\mathrm{I} + \delta_\mathrm{P} + \delta_{AC}}_{\text{Secondary effects}}\right)$$

*P. Schmidt-Wellenburg. The latest episode in the quest for an electric dipole moment of the neutron and the future endeavor at PSI. FRIB EDM workshop. (2019)

Hg-199 Vapor Cell

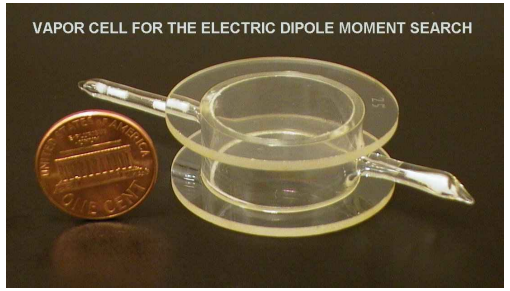

Seattle's Hg EDM Experiment

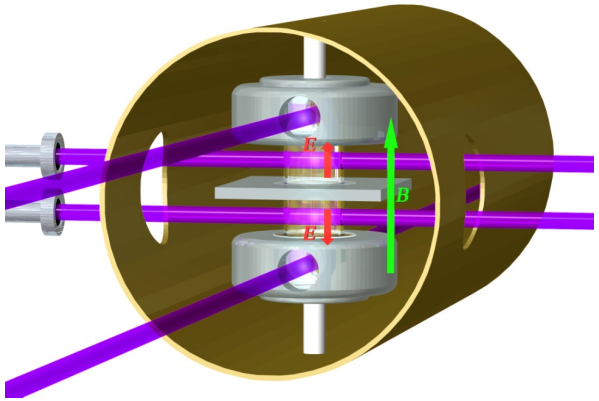

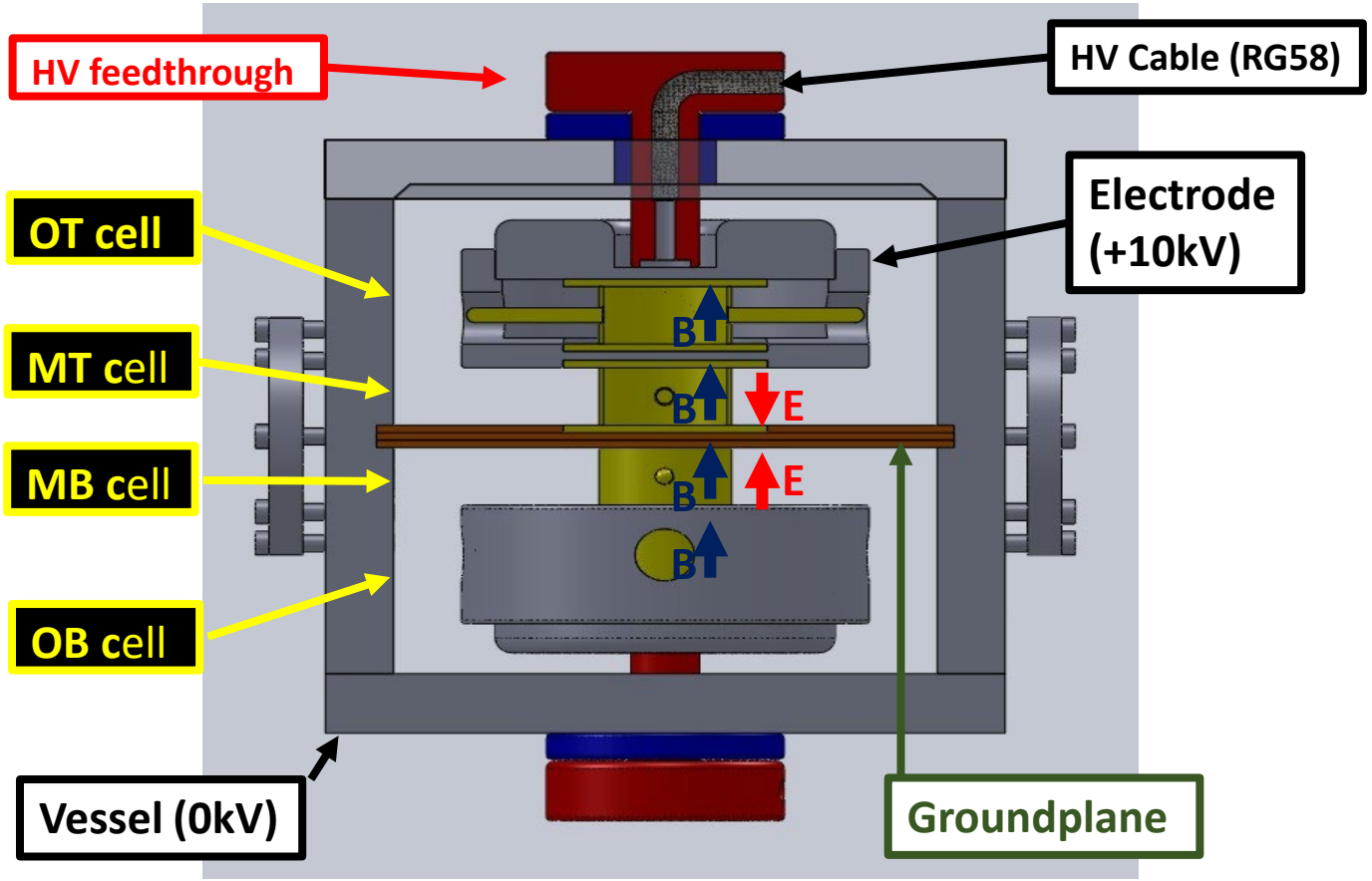

- A stack of four Hg vapor cells
- The fused-silica plate defines the ground
- The outer two cells sit inside of HV electrodes and serve as magnetometers.
- The vessel sits inside the three-layer mu-metal shields.

Faraday Rotation Detection

- Atomic polarization changes the index of refraction for σ_+ and σ_- light
- Incoming linearly polarized probe light is rotated
- Rotation angle oscillates at the Larmor frequency
- A polarizing beam splitter separates the beam into vertical, horizontal components
- Intensity of 2 orthogonal polarization states oscillate out of phase

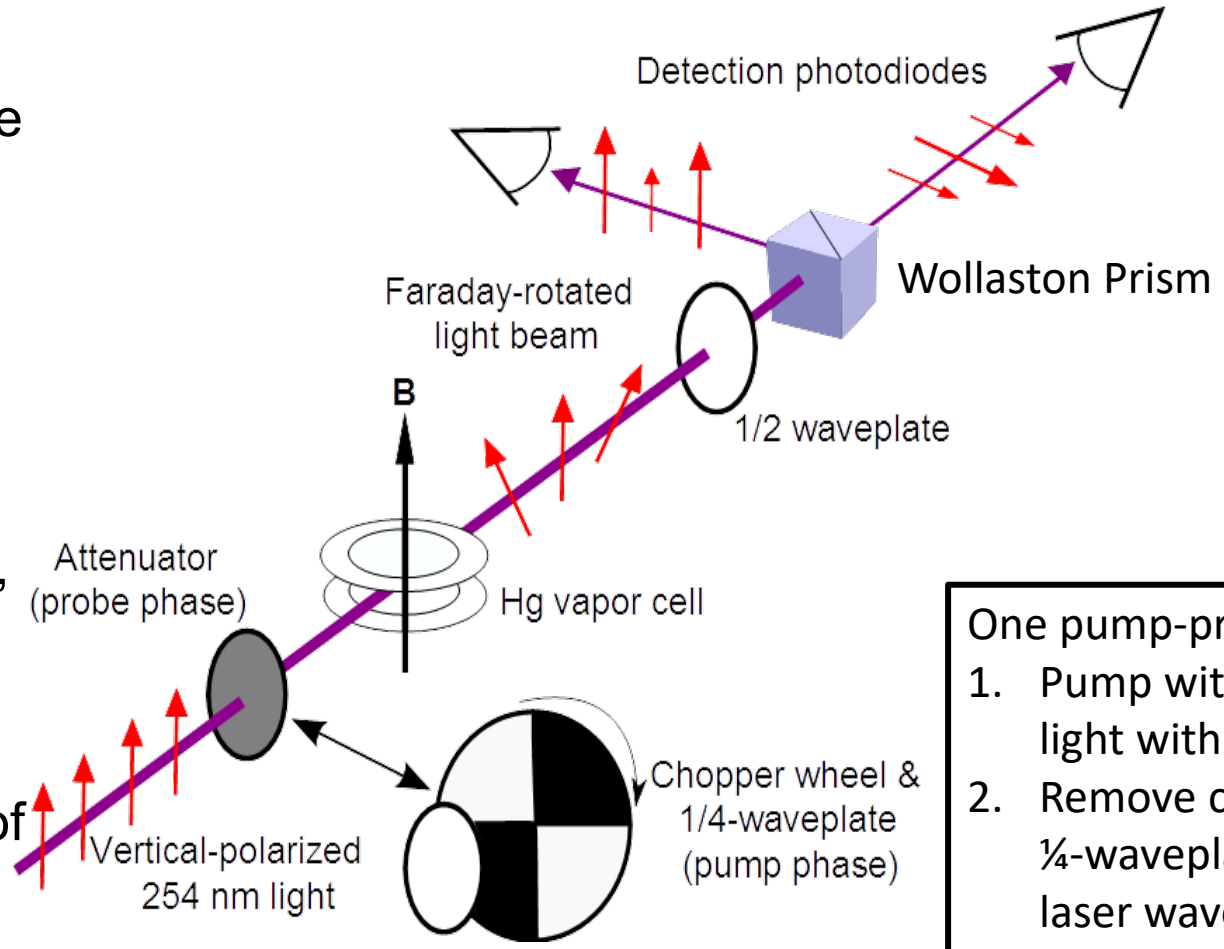

One pump-probe cycle
1. Pump with circular light with a chopper
2. Remove chopper and ¼-waveplate, change laser wavelength
3. Probe with linear light

Hg Magnetometry in nEDM@LANL

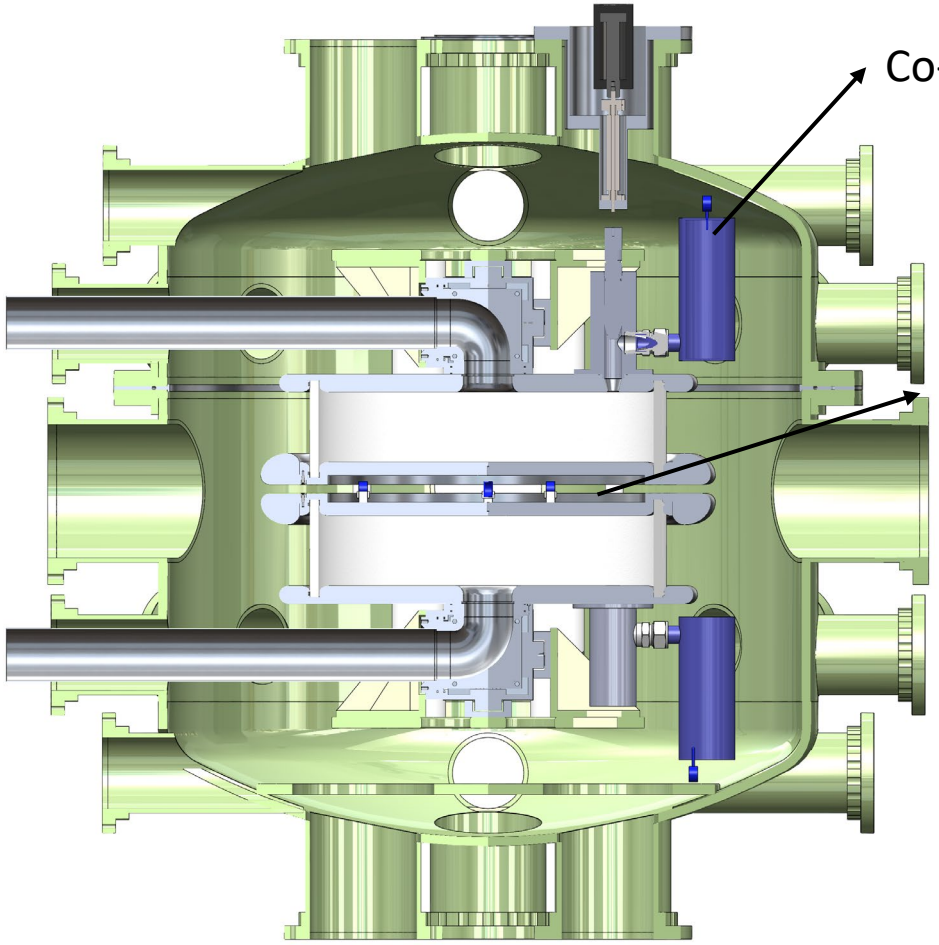

Co-Mag Pump Chamber

5 Hg Sealed Cells

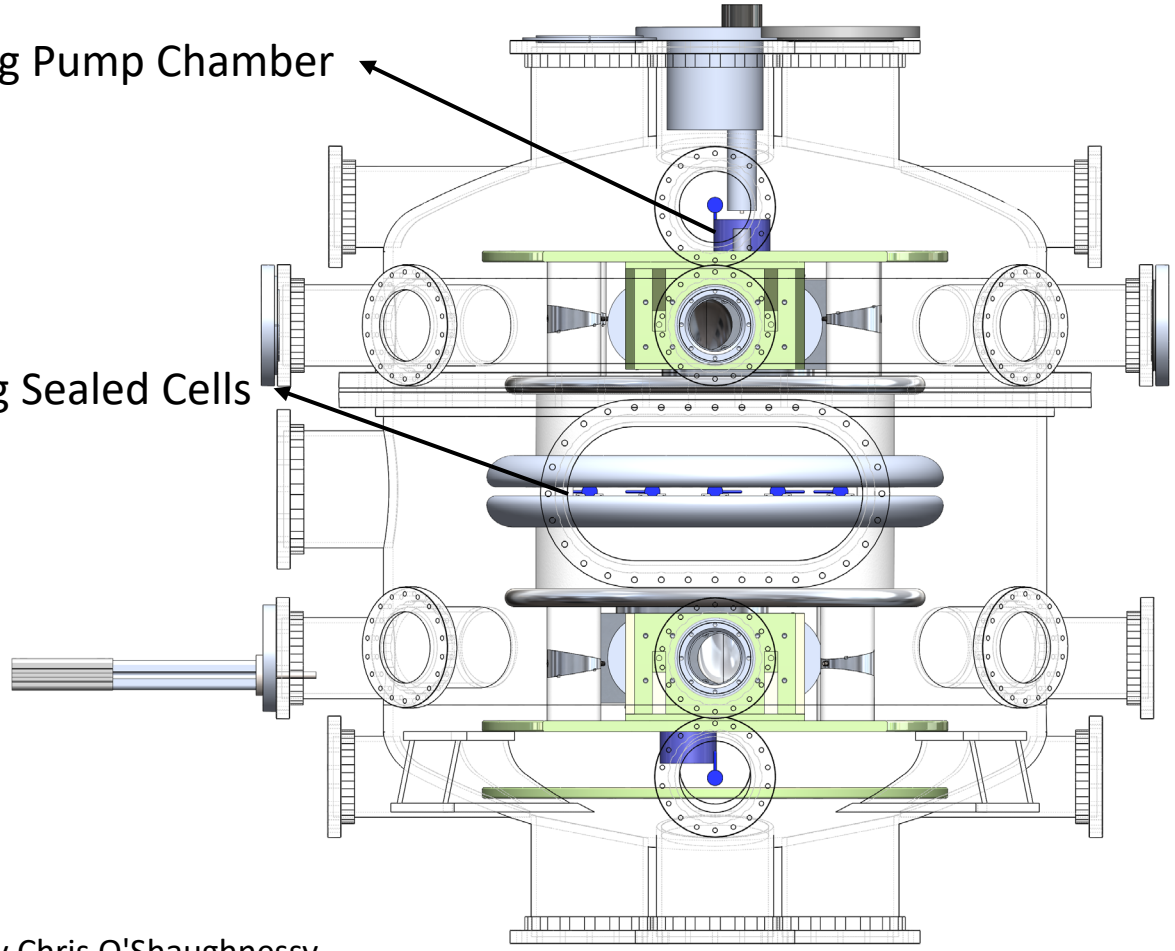

Image by Chris O'Shaughnessy

Laser path in Hg Magnetometry

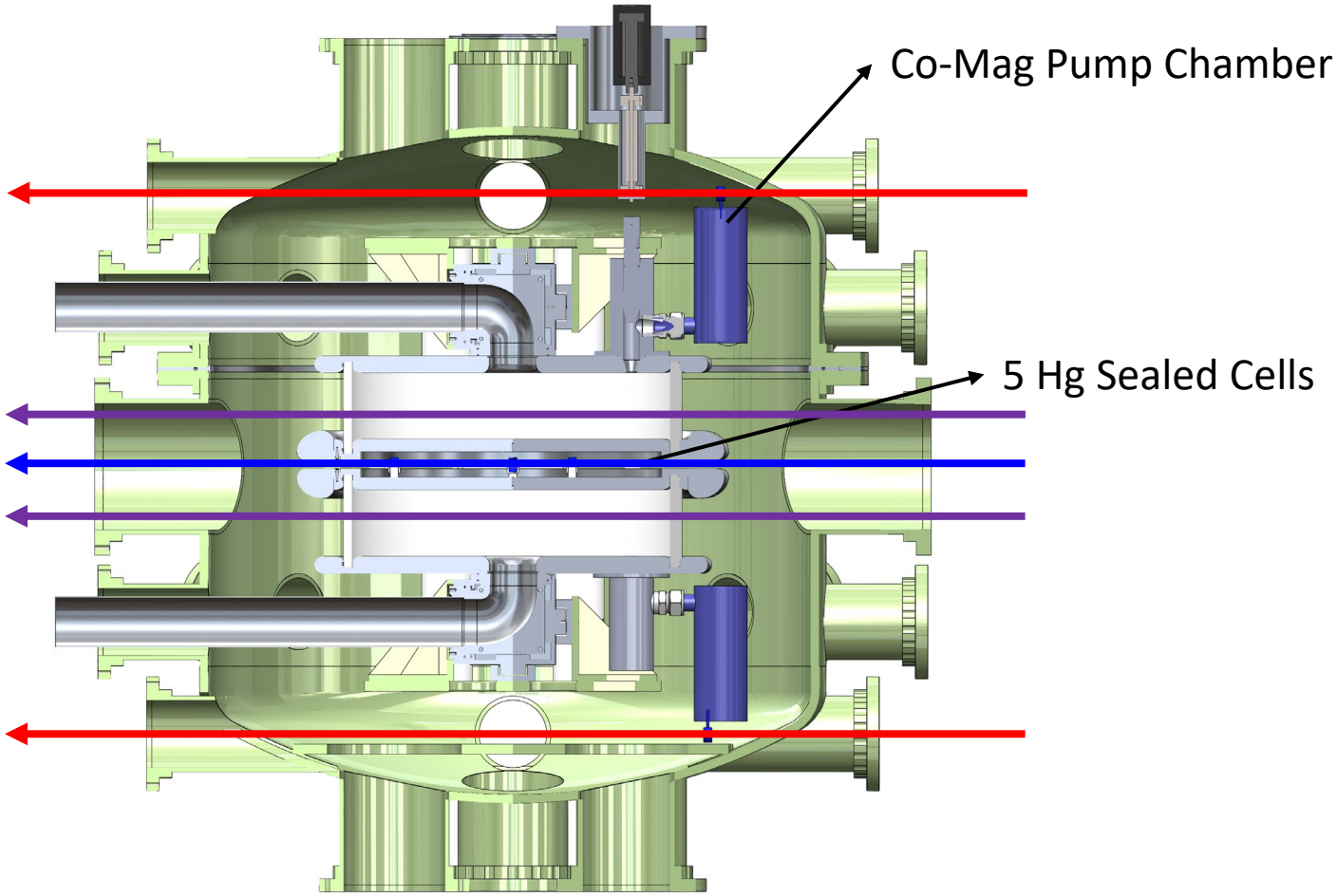

Image by Chris O'Shaughnessy

Hg-199 as co-magnetometer and magnetometers

- nEDM@LANL has two precession chambers.
- 5 Hg magnetometers inside the HV electrode.
- All the pump beams come in from the side.
- The laser beams for the top precession chamber and the pumping chambers will raise up to 7.6 ft and 6.2 ft.
- Two L-shape tables
- Be able to monitor the pumping signal.

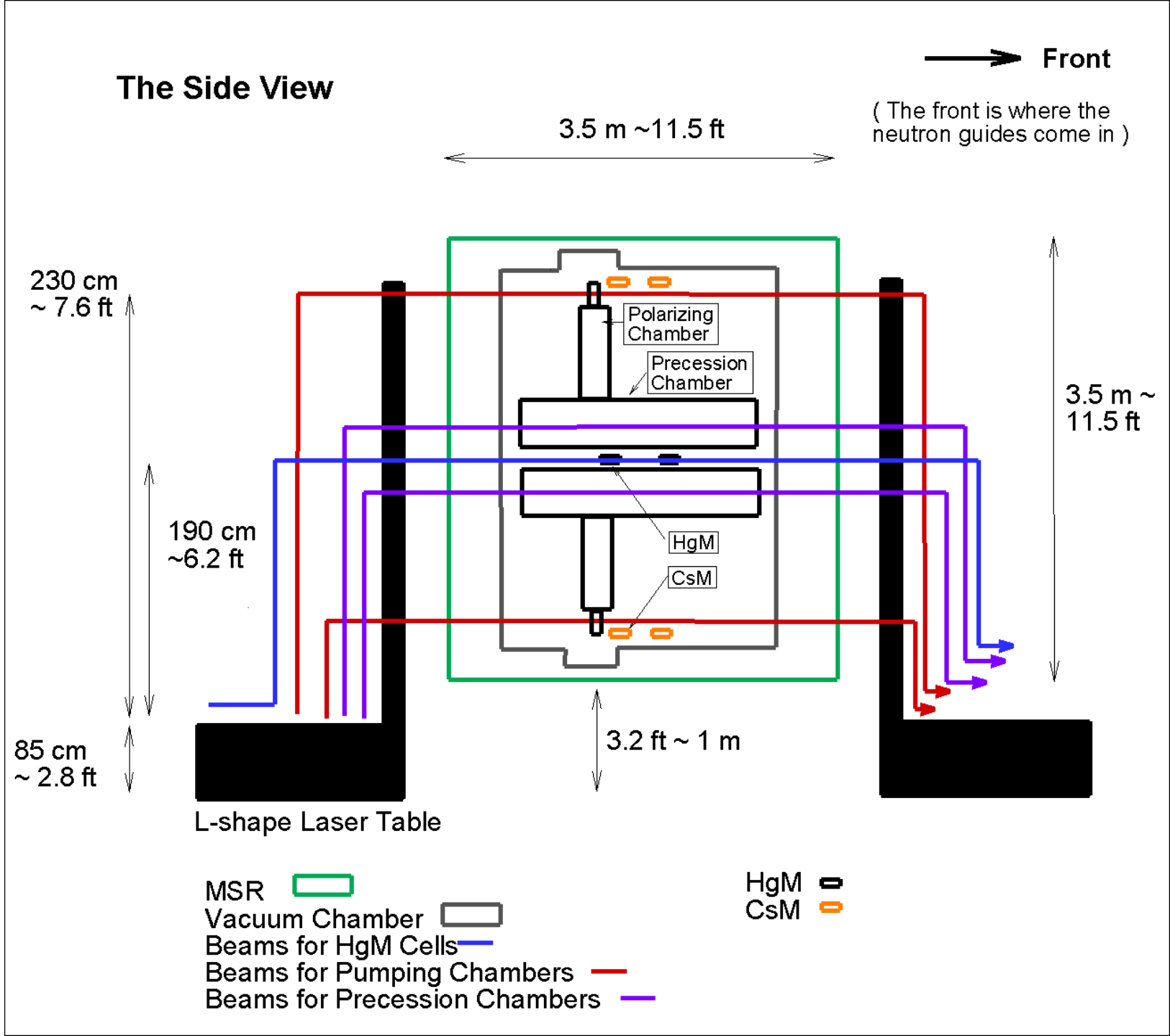

Status

- Optics setup for nEDM@LANL
- The Larmor precession frequency is detected by the Faraday rotation of the laser polarization.
- Lock the laser frequency during the pump and probe phases with a Hg reference cell.
  - Frequency locking circuit design and fabrication
- Hg cell fabrication with various coatings

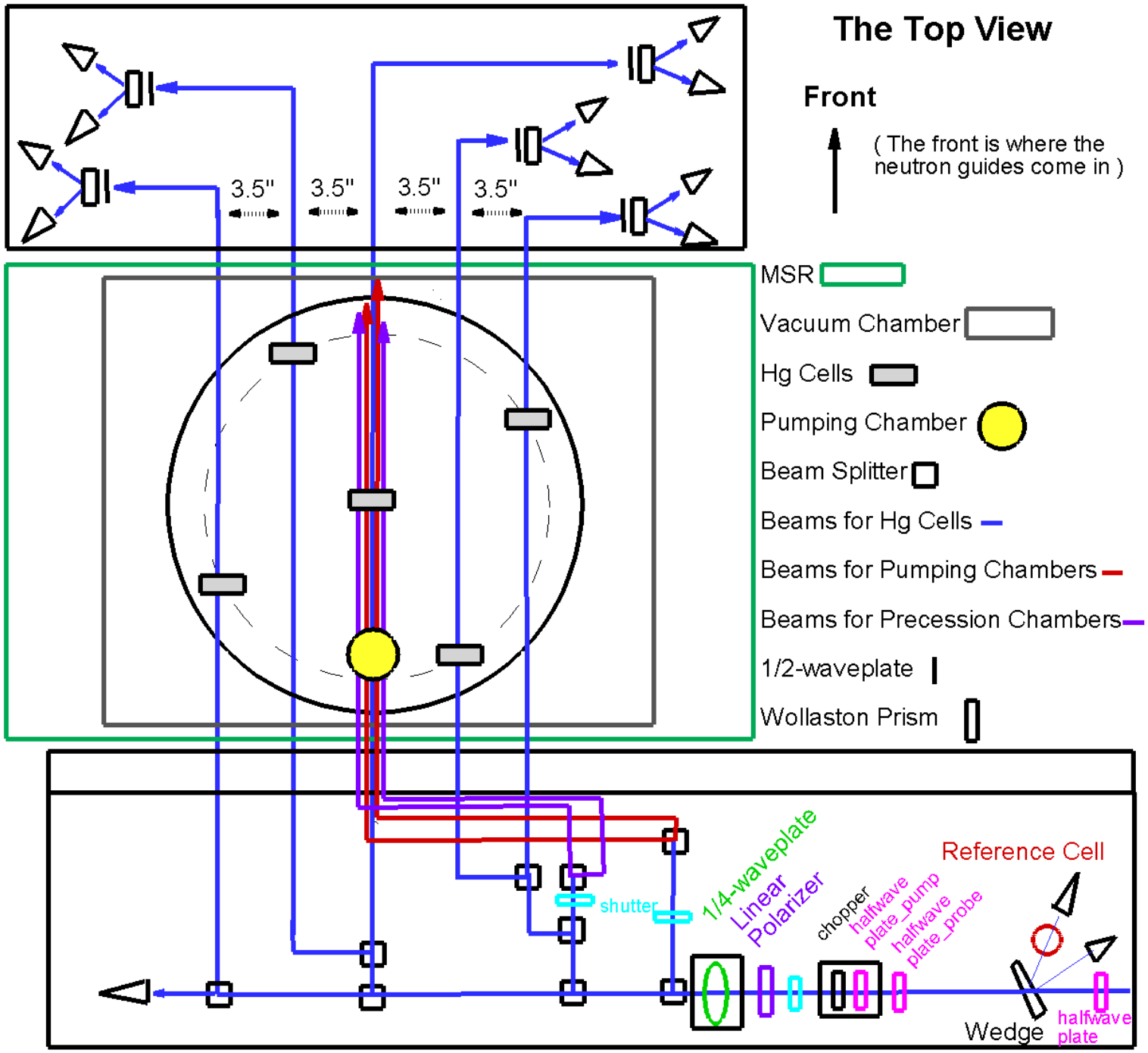

Laser system

- The laser frequency is continuedly locked during the pump and probe phases with two photodiode signals through a frequency locking circuit:
  1. the UV intensity monitor and
  2. the transmission signal of a reference cell (natural Hg)

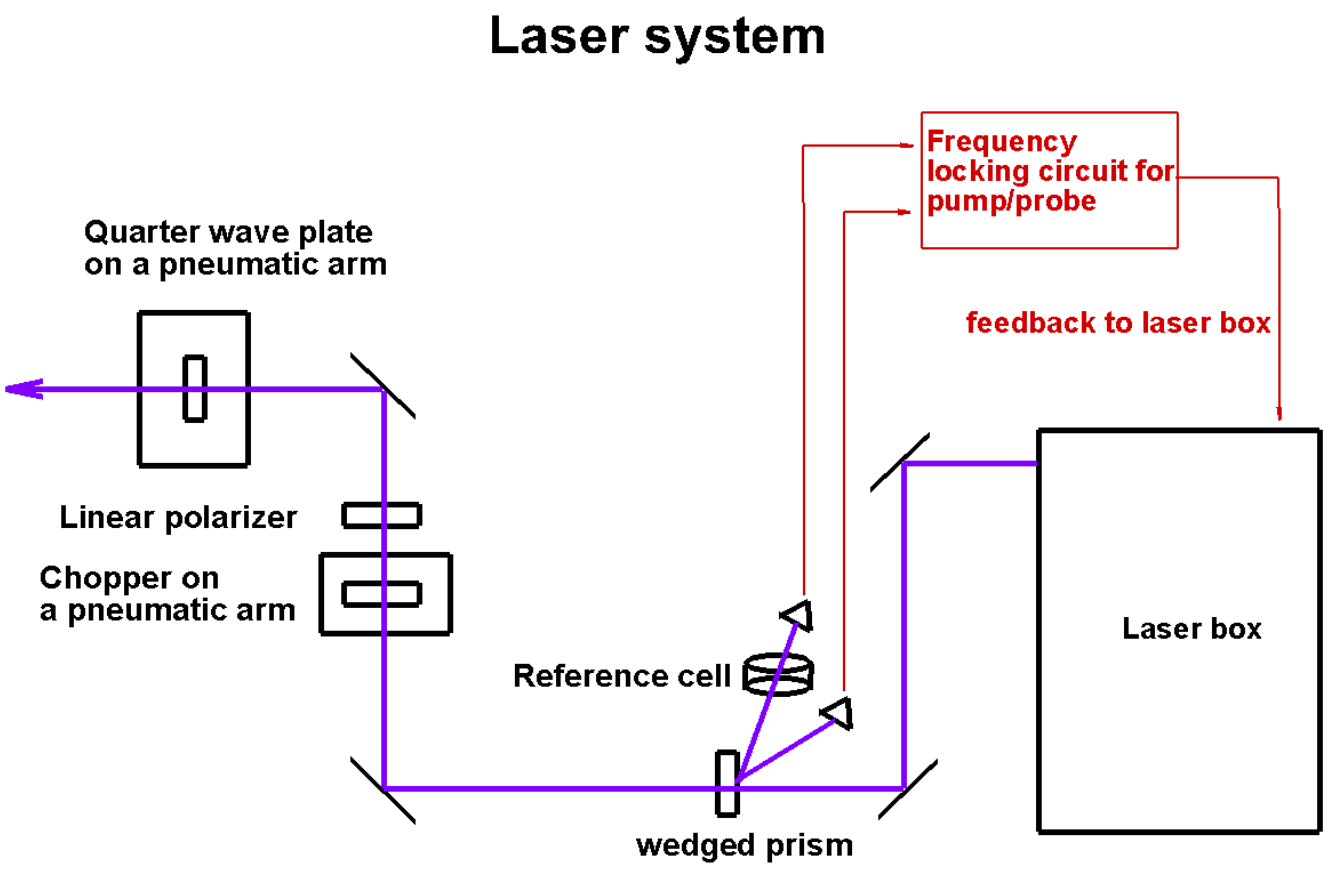

	Reference cell	HV external Hg mag cell	Hg polarizing chamber	Hg in precession chamber
Number	1	5	2	2
Wall coating	None	Dotriacontane	TBD	TBD
Size	Cylinder: ID = 19 mm H=10mm	Cylinder: ID = 19 mm H = 10 mm	Cylinder: ID = 90 mm H = 203.2 mm (8”)	Cylinder: ID = 482.6 mm (19”) H = 95.25 mm (3.75”)
Optical Length	10 mm	10 mm	10 mm	482.6 mm
Hg number density [atoms/cc]	5.4×10^{13}@ 23°C	5.4×10^{13}@ 23°C	4×10^{11}	3×10^{10}
Buffer gas	100 torr He	5 torr CO	None	None
Pressure Shift	57 MHz	-12.4 MHz	None	None
Pressure Broadening	787 MHz	47.35 MHz	None	None
Zero vector light shift (- is to the red)		-10 MHz	-10 MHz	-10 MHz
Challenge	**A decent error signal at λ_{pump} and λ_{probe}**	**Photon re-emission**	**Photon re-emission**	**Laser has a long vertical travel**

Hg co-mag, HV Hg cell, reference cell and laser

- (Blue) enriched Hg-199 without buffer gas
- (Green) 5 torr of CO in HV Hg cell is to reduce the photon re-emission effect
- (Red) 100 torr of He shifts the reference cell to the blue for a better error signal.
- To avoid the systematics from light shift, the pump and probe frequencies are chosen carefully.
- During the probe, the laser frequency is tuned by about 10GHz to blue from the resonance where is zero vector absorptivity and is sensitive with frequency.

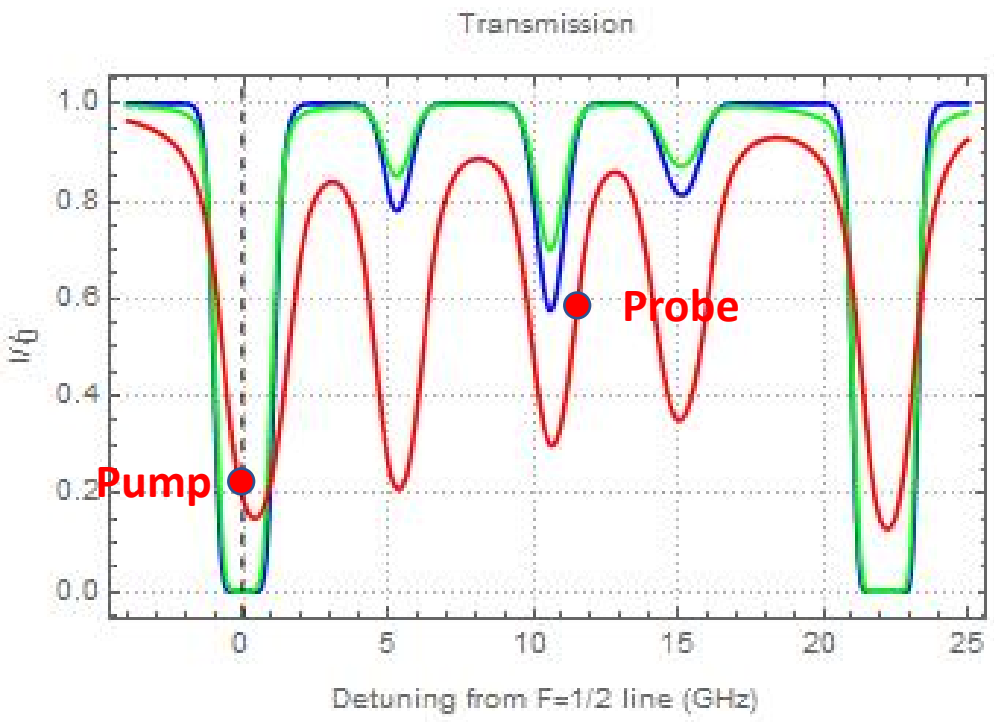

Hg co–mag chamber: 10^{-6} torr

Hg mag cell: 5 torr of CO

Hg reference cell: 100 torr of He

HV Hg cell fabrication

- A long (> 150 s) and stable coherence time of mercury atoms in a vapor cell is essential to measure the magnetic field precisely.
- Unlike Hg-comagnetometer, Hg atoms do not get refilled for a new cycle. The UV exposure could degrade the Hg coherence time with scans.
- Relaxation mechanism:
  - Magnetic field inhomogeneities
  - Wall collisions→ test with different coatings
  - Atom-atom collision (gaseous impurities, buffer gas) → change optimal pump/probe frequencies
  - Loss into the reservoir (liquid Hg)
- Need to test for different coatings:
  - The hydrocarbon paraffin used in Seattle's Hg EDM cell is not compatible with neutrons.
  - It does not always give long coherence time.
  - Hydrogen atoms can degrade the lifetime

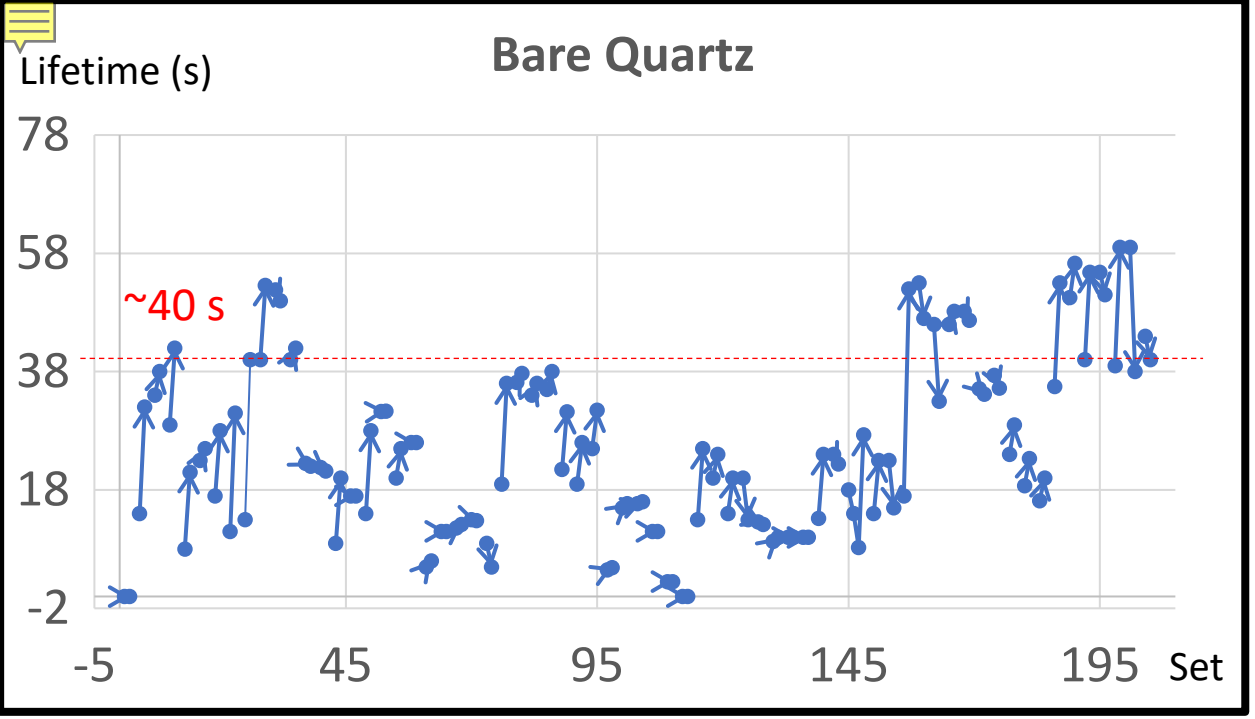

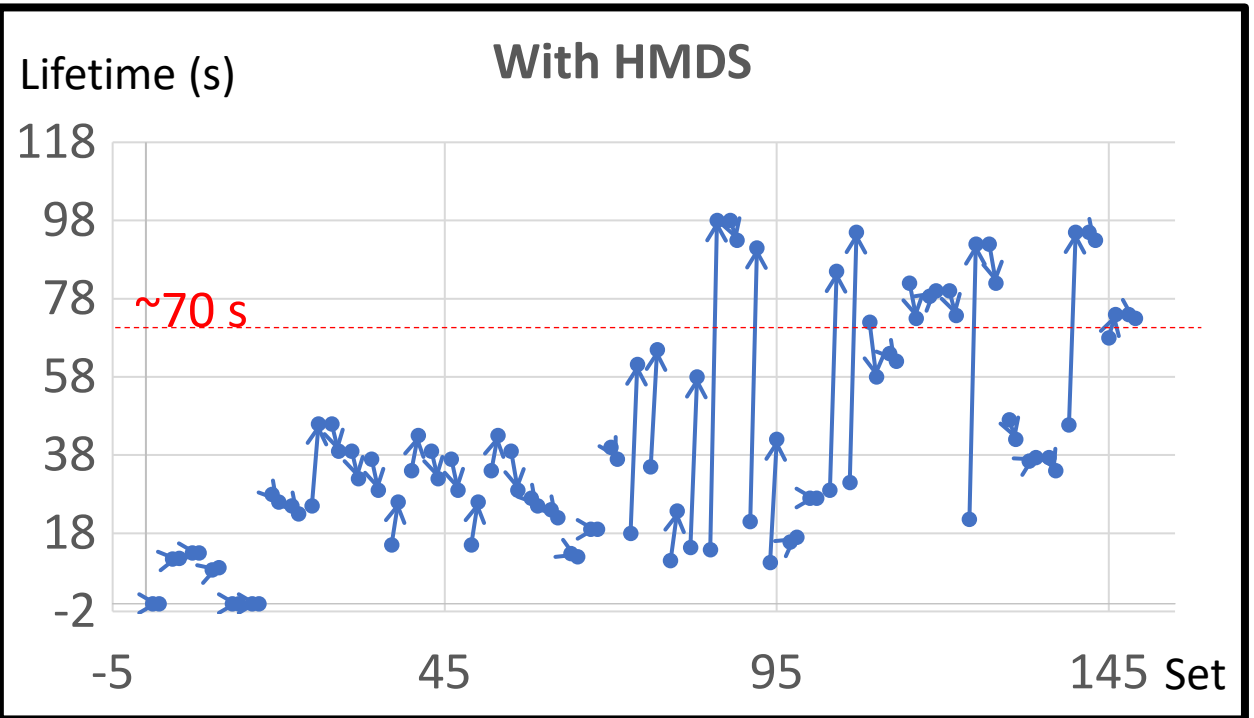

Lifetime Measurement

- Experiment with the pre-coating: hexamethyldisilizane (HMDS)
- Bare Quartz is without HMDS and another is with HMDS.
- How much work goes in after sealing off the cell from the vacuum manifold.
- Parameters:
  - The wax and its distribution
  - Excess of Hg
  - Contamination
- Stabilized at 40 s and 70 s.

Coating with Perfluoroeicosane (C20F42)

- Commonly used wax is dotriacontane (C32H66) paraffin.
- Eliminate the atomic Hydrogen from Paraffin wax. Replaced with fluorine.
- Two challenges:
  - Evaporating the wax inside a small cell.
  - Form an atomically uniform layer of coating with a control

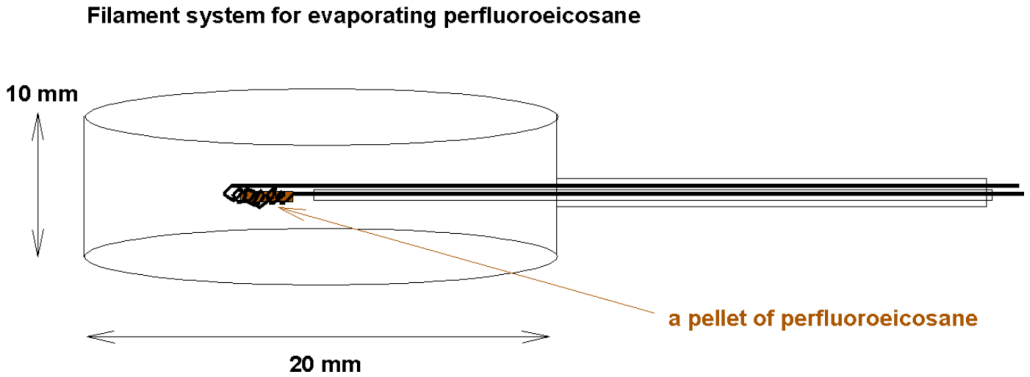

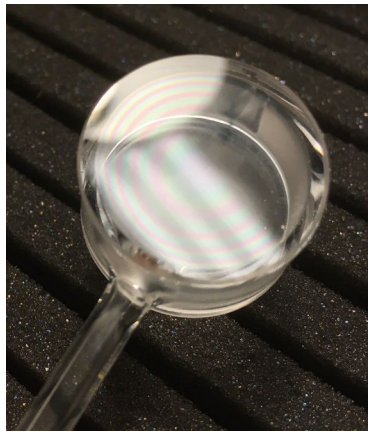

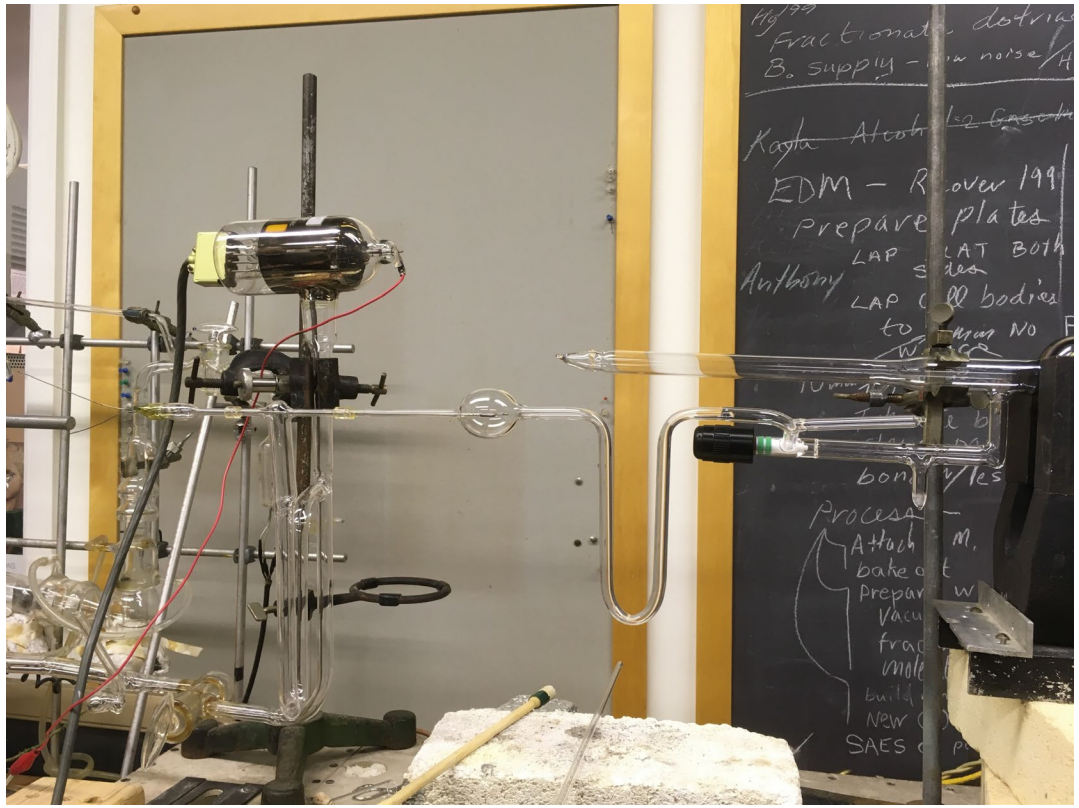

Summary

- Significant progress on HV Hg magnetometer's development
  - Reference cell
  - Test with various wall coatings
  - The laser design at LANL
  - Frequency locking circuit
- Next steps:
  - Test Hg cells with various wall coatings
  - Perform optical pumping with 254nm UV laser
  - Prototype Hg co-mag system

The collaboration of nEDM@LANL

- Los Alamos National Laboratory
  - Takeyasu Ito
  - Christopher O'Shaughnessy
  - Steven Clayton
  - Taufique Hassan
  - Pinghan Chu
- Indiana University
  - Chen-Yu Liu
  - Joshua Long
  - Yi Chen
  - Douglas Wong
  - Tyler Horoho
- University of Kentucky
  - Bradley Plaster
  - Jared Brewington
- University of Michigan
  - Tim Chupp
- California Institute of Technology
  - Christopher Swank
- East Tennessee State University
  - Robert Pattie
- Tennessee Tech University
  - Adam Holley
- Trinity College
  - Austin Reid

This work was supported by Los Alamos National Laboratory LDRD and the National Science Foundation, grants PHY-1828512 and PHY-1614545.