Crab Cavity Plans in the SPS

Alick Macpherson
LHC Operations Group & RF Group
CERN

RFTech Workshop - 25th March 2013

Acknowledgments
Philippe Baudrenghien, Krzysztof Brodzinski, Rama Calaga, Ofelia Capatina, Frederic Galleazzi, Erk Jensen, Eric Montesinos, Vittorio Parma, Rogelio Tomas, Giovanna Vandoni

Crab cavities - Why we want them in the LHC

- **Crab Cavities**: Transverse deflecting cavities that rotate bunches to optimize the geometrical reduction factor in luminosity for colliding beams with a non-zero crossing angle.

Motivation for HL-LHC

- **Can optimize luminosity production**
  - **Gives a factor ~2 in Luminosity reach**
- **Can be used for luminosity leveling**
- **Can moderate longitudinal vertex density**

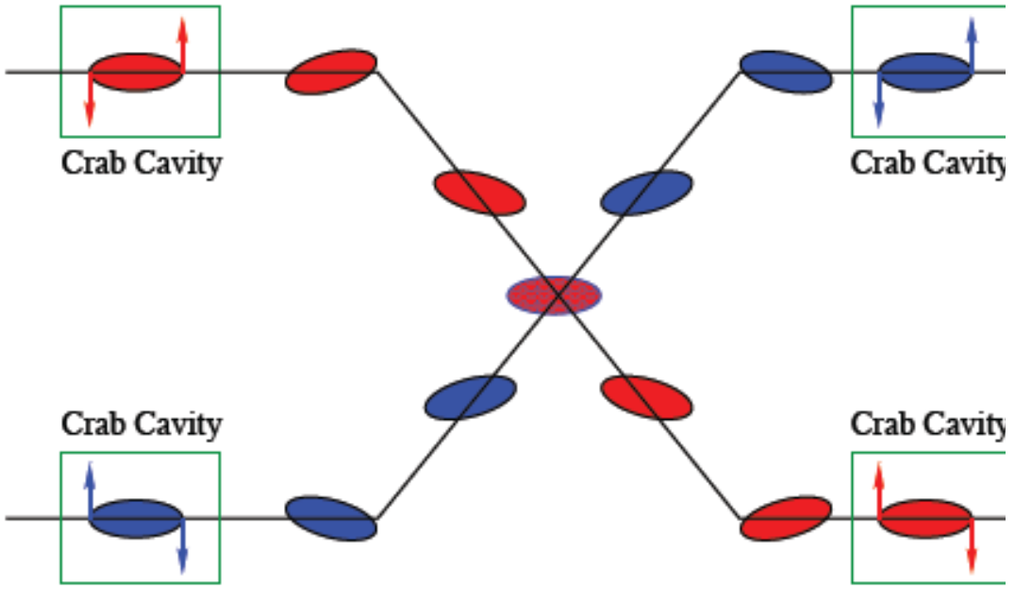

LHC Prerequisites

- Show that crab cavities can work effectively in LHC environment
- Ensure machine protection aspects are compatible with LHC operation

Demonstration of feasibility with proton machines: SPS validation is essential

Crab Cavities in the SPS:

- **SPS Validation program - Objectives**
  - Validate Crab cavity design for proton beams
  - Validate operational functionality & Machine protection mechanisms
  - **Overall goal => set inputs for final design**

- **SPS tests considered essential to finalize design + operational scenarios**
  - SPS crab cavity tests **not foreseen before 2016**

- **Crab cavity prototypes:**
  - Compact superconducting transverse deflecting cavities
    - complicated geometry, **compact**, made from solid Niobium

- **Operational Constraint: Cavities must not block normal SPS operation**
  - Must be possible to remove from beam line on short time scale.

SPS Crab Cavity Validation Program

- **Stand alone validation**
  - Full characterization of cryomodule & cavities prior to installation in SPS
- **Invisibility Tests**
  - Crab Cavities must be transparent to operation when detuned
- **Beam loaded measurements**
  - Cavity performance with beam: cavity response, heat loads, RF noise etc
- **Validation of cavity operational cycle with beam**
  - LLRF permits cycling multiple cavities through operational states
- **Crabbing functionality:**
  - Validation of crabbing, performance analysis vs beam parameters
- **Machine Protection Aspects**
  - Detection of failure modes and mitigations/interlocks associated with LLRF

Crab Cavity layout

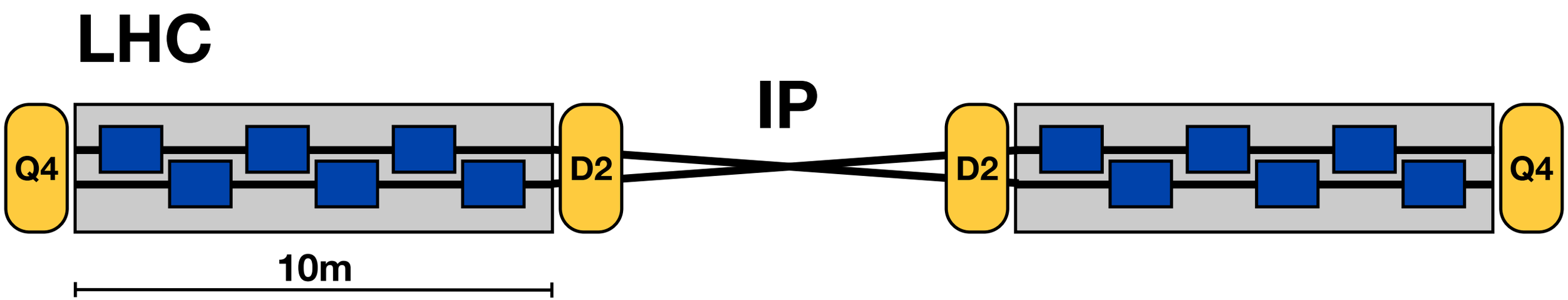

- LHC: Local crabbing scheme: 3 cavities per beam on each side of the IP

Crab Cavity layout

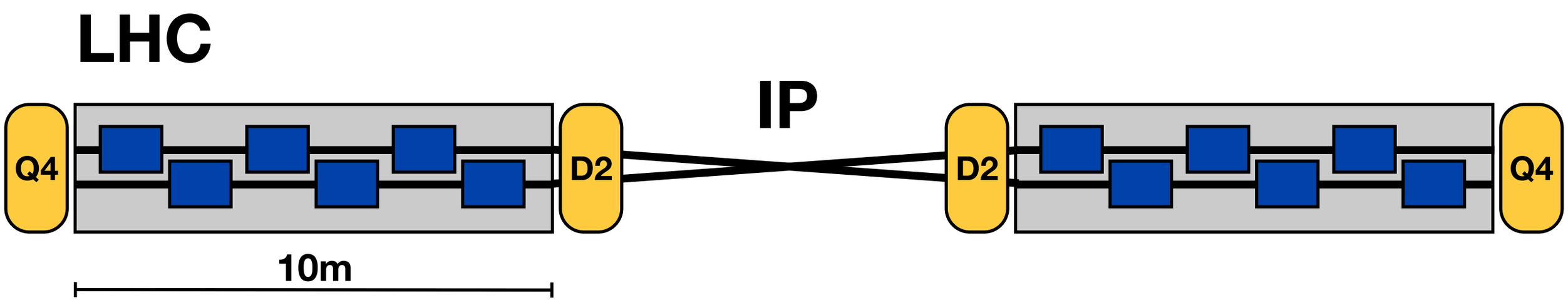

- LHC: Local crabbing scheme: 3 cavities per beam on each side of the IP

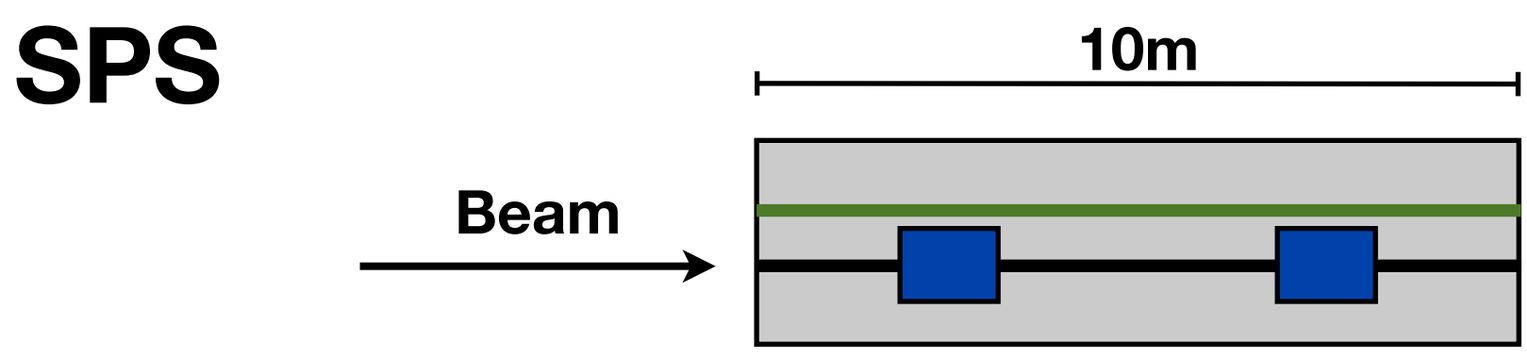

- SPS: Possible to test of both local or global crabbing schemes
- 2 identical cavities per cryomodule, 1 RF amplifier per cavity
- Cavities can only stay in beam line if superconducting state maintained
- SPS tests: Only horizontal crabbing (LHC: crabbing in both H & V)

SPS crab cavity location

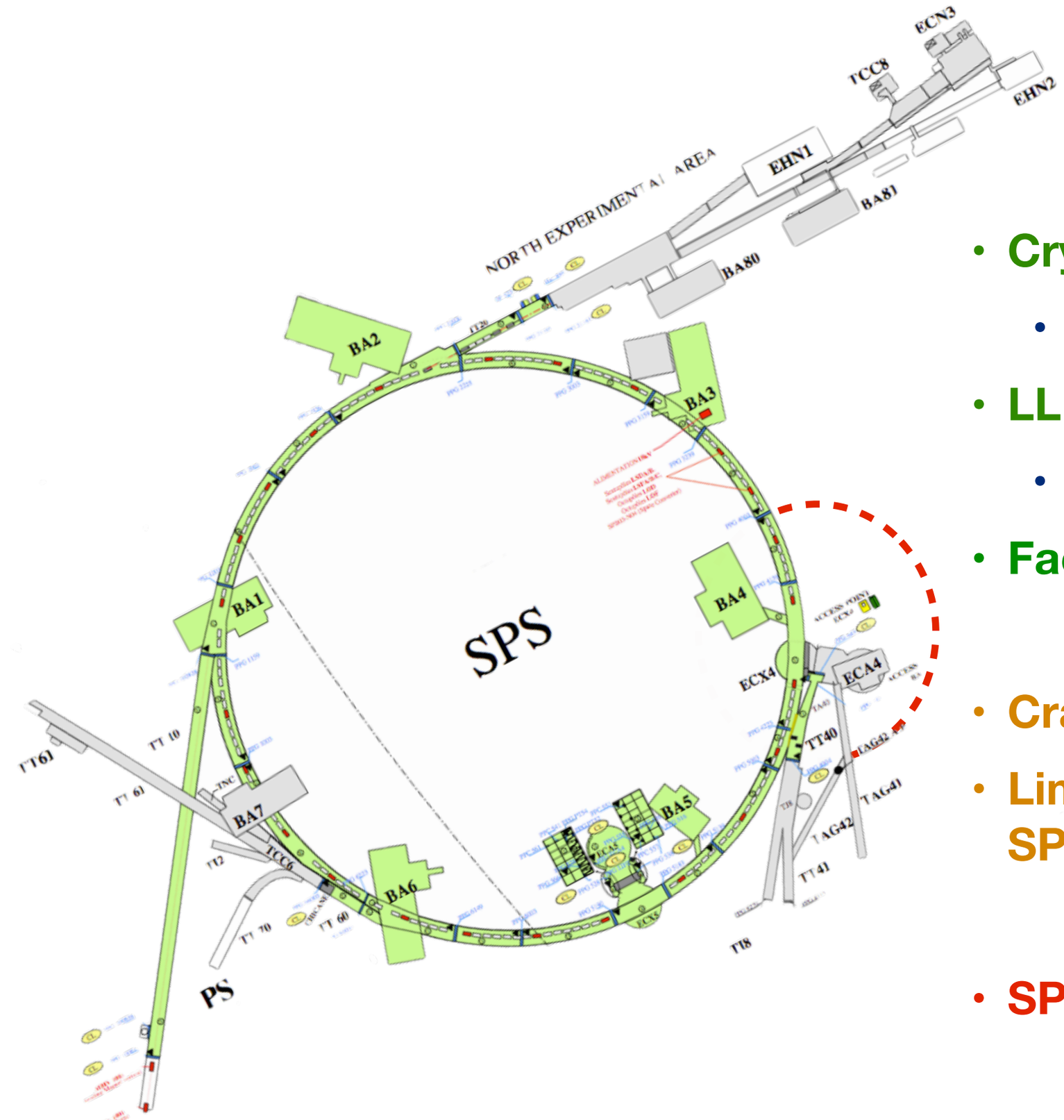

SPS Location: LSS4

- **Cryogenics Infrastructure**
  - Only SPS Pt 4 is feasible
- **LLRF can be close (35m)**
  - Experimental cavern (ECX4)
- **Facility for switching cavities in/out**
- **Crab Cavity space not free till 2015**
- **Limited access to SPS zone after SPS long shutdown (2013-2014)**
- **SPS Extraction pt for LHC beam 2**

SPS LSS4 Layout

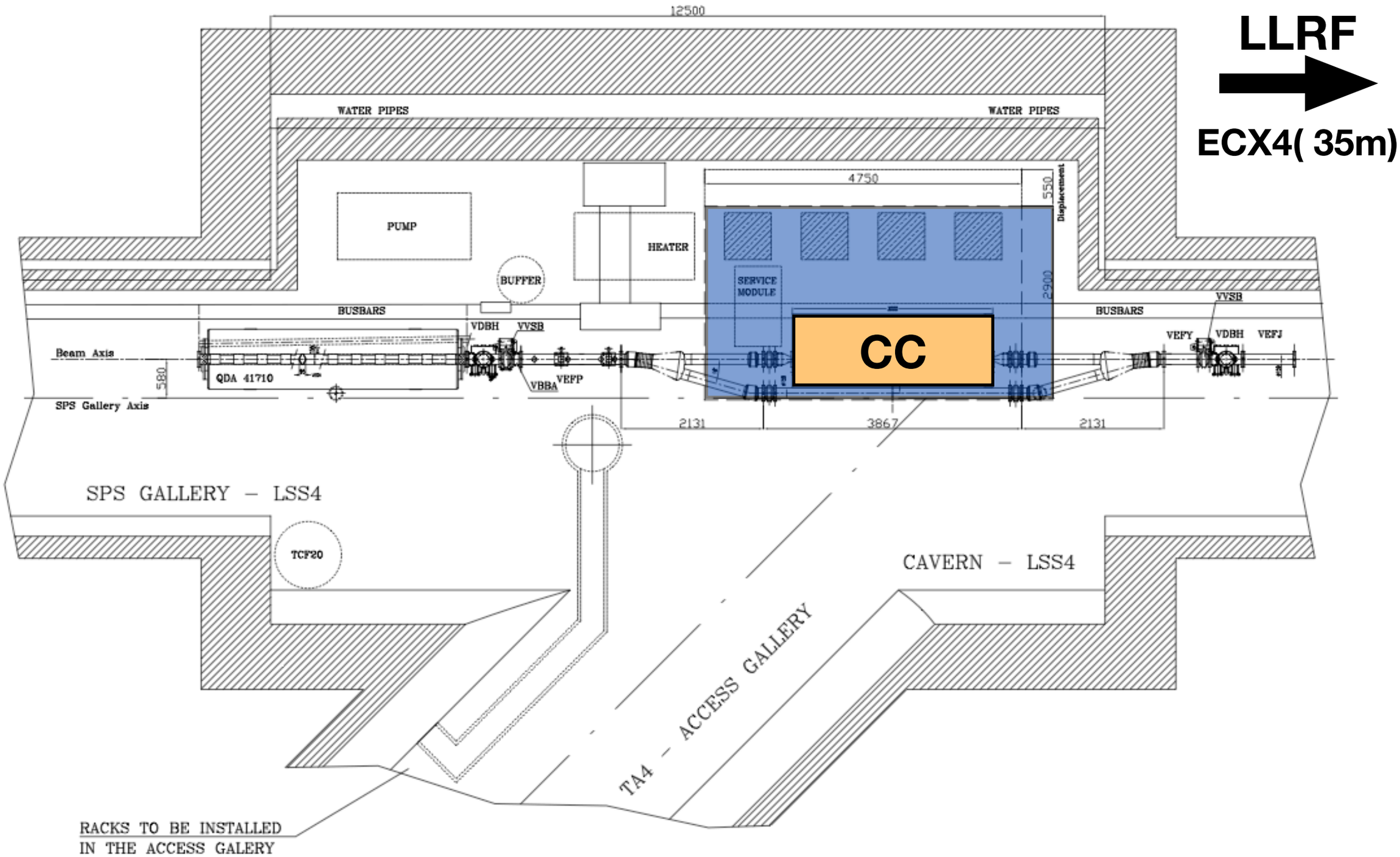

SPS Integration - Space available

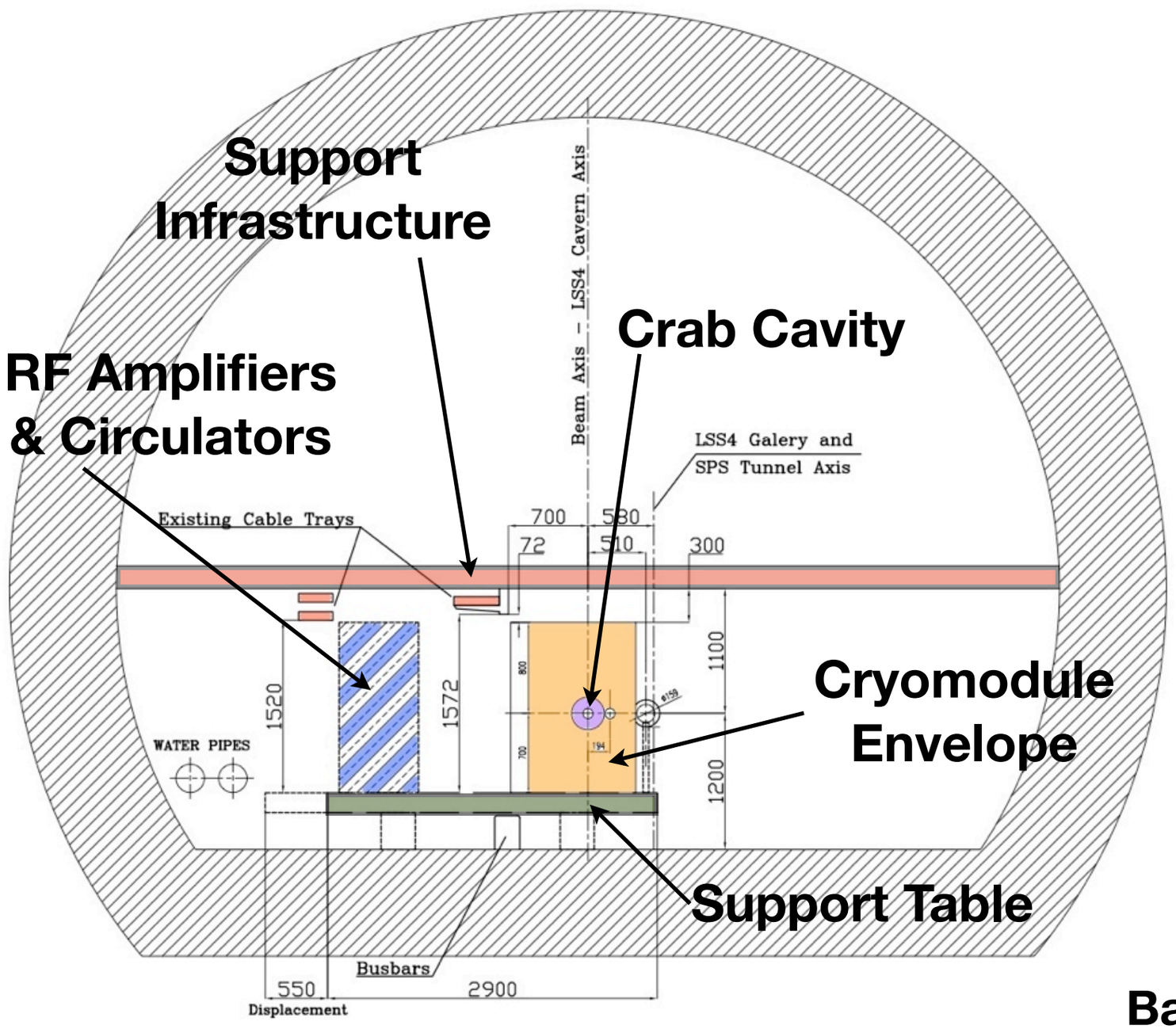

Integration Issues

- **Transport Lane respected**
- Support table: size ~5x3m
  - **Transverse motion = 510 mm**
- **Constrained cryomodule volume**
- **RF amplifiers mounted on support table**
  - Rigid connections between RF amplifiers and cryomodule
- Rigid cryo lines onto cryomodule to minimize heat load

Based on 3D model built from Dec 2012 scans of as-installed geometry

Integration in the SPS -operational aspects

SPS operation must be independent of crab cavity operational availability

- Crab Cavity module switchable from in-beam to out-of-beam position

=> Mechanical Y-Chamber mounted on support table

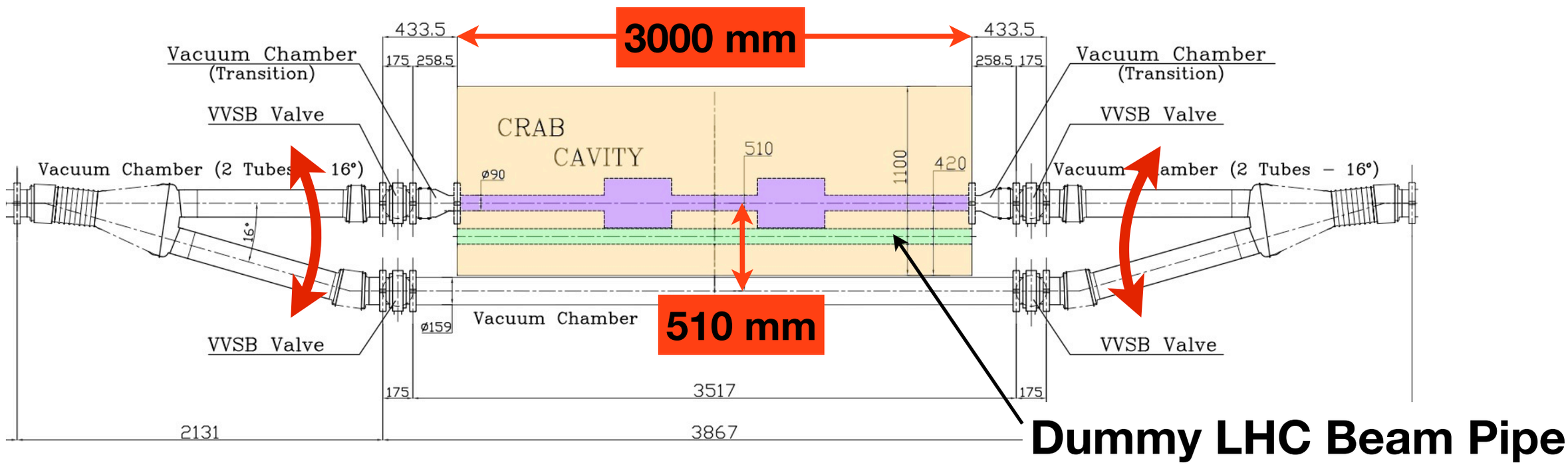

- **Y-chamber movement: reproducible 0.5 m transverse movement in < 1hr**
  - Must be remote controlled (ie no access required) and take
    - Safety incorporated into support structure design
    - Mechanical movement of helium vessels, cryo-lines etc

SPS Operational Constraints

- **SPS Extraction bump prohibits CC in beam when filling LHC**
- CCs in beam: Blocks LHC filling. Aperture bottleneck for normal SPS operation

  => Y-Chamber needed so cavities can be bypassed when not under test

SPS LSS4: LHC Extraction bump (Q20 optics)

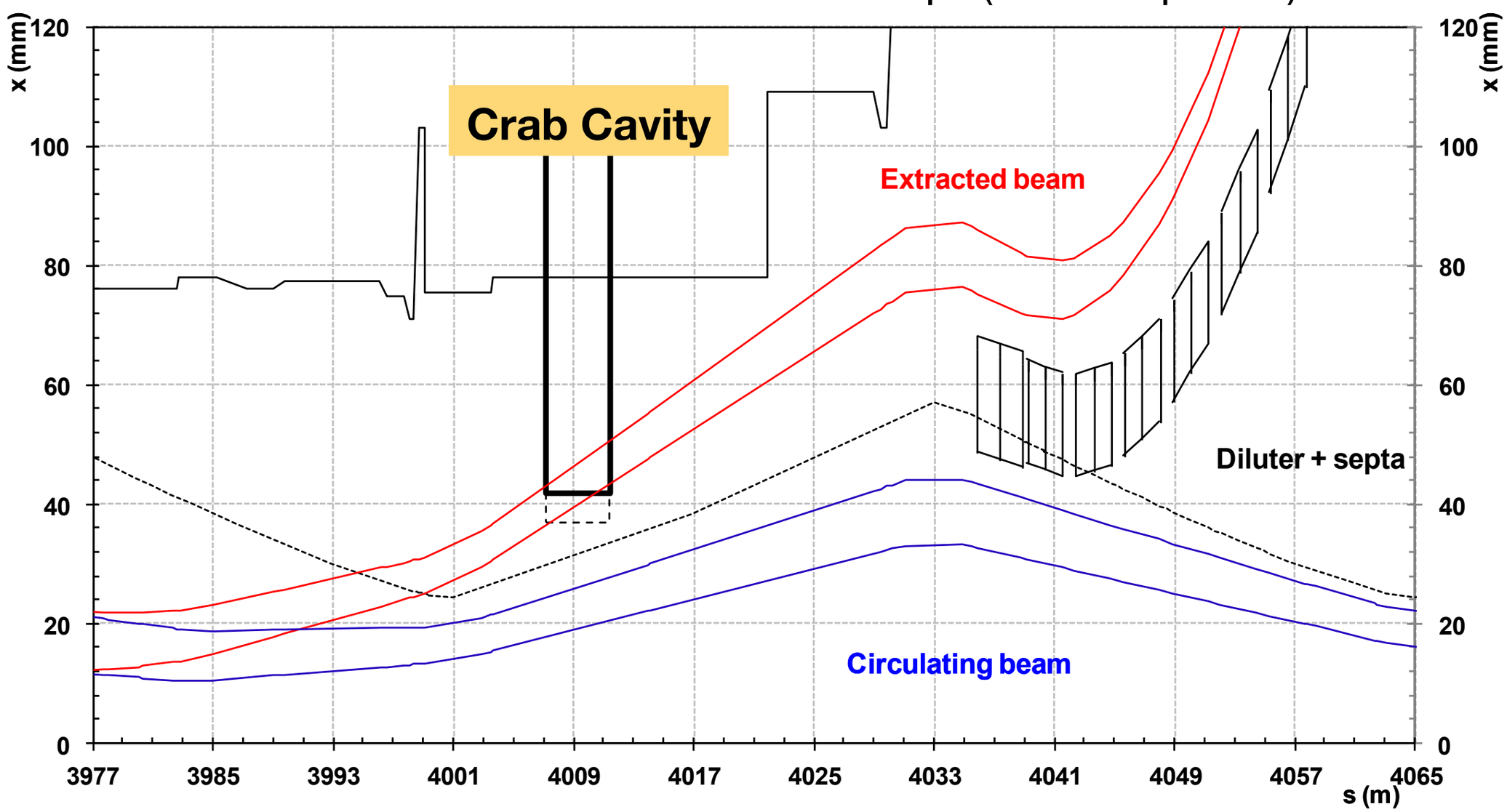

SPS Cryogenic Issues

- **Cryo infrastructure for 2K operation**
  - Existing 4.5K cryo station, but **concerns over liquefaction capacity**

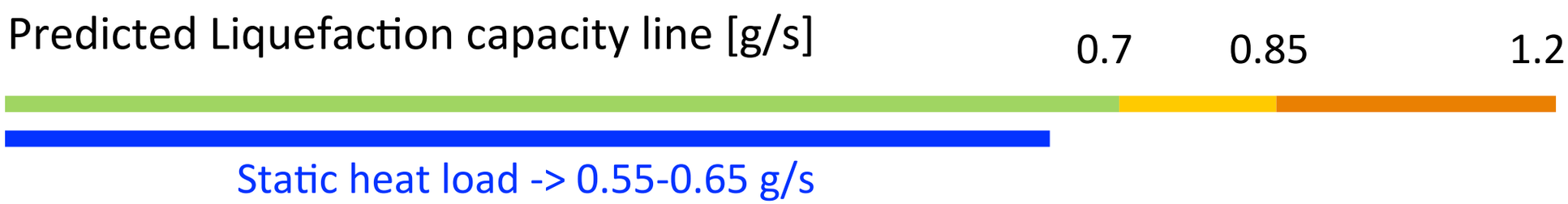

SPS Cryogenic Issues

- **Cryo infrastructure for 2K operation**
  - Existing 4.5K cryo station, but **concerns over liquefaction capacity**

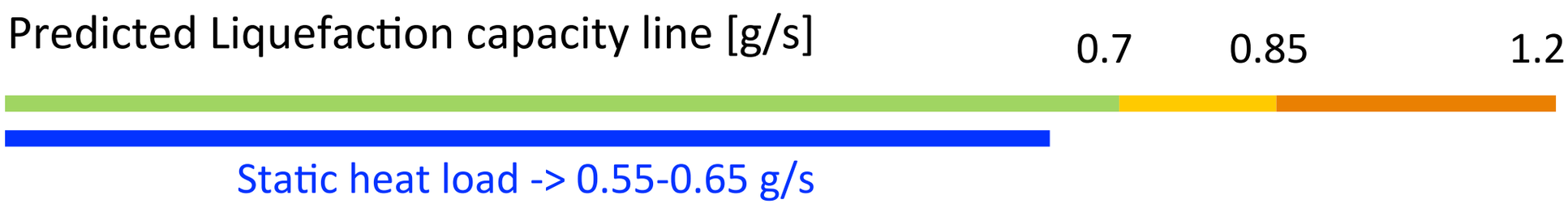

  - **Helium Liquefaction capacity measurement mandatory**
  - **Static and dynamic heat loads to be reviewed** (cavities + infrastructure)

Equipment	Heat load @ 2K	Source of capacity
cryostat -static	~ 7W @ 2K	TCF20 -> 0.35 g/s
cryostat -dynamic	~ 5-10 W @2K	TCF20/Buffer tank
Service module	~1-2 W @ 2K	TCF20 -> 0.1 g/s
Buffer tank	~1-2 W @ 4.5 K	TCF20 -> 0.1 g/s
Transfer lines	~2 W @ 4.5 K	TCF20 -> 0.1 g/s

SPS Cryogenic Issues

- **Cryo infrastructure for 2K operation**
  - Existing 4.5K cryo station, but **concerns over liquefaction capacity**

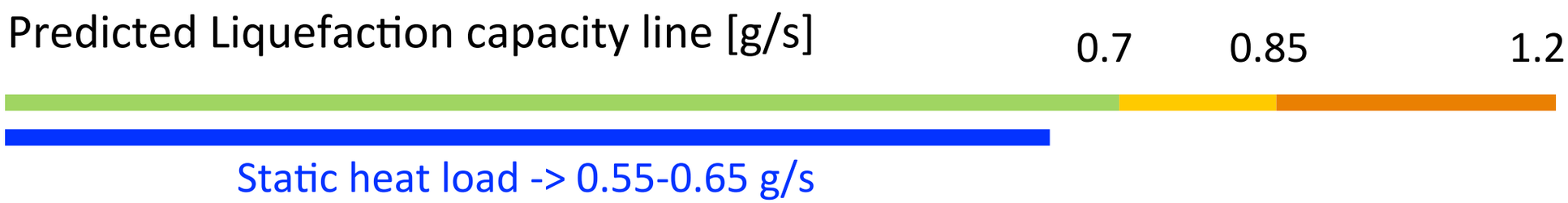

  - **Helium Liquefaction capacity measurement mandatory**
  - **Static and dynamic heat loads to be reviewed** (cavities + infrastructure)

Equipment	Heat load @ 2K	Source of capacity
cryostat -static	~ 7W @ 2K	TCF20 -> 0.35 g/s
cryostat -dynamic	~ 5-10 W @2K	TCF20/Buffer tank
Service module	~1-2 W @ 2K	TCF20 -> 0.1 g/s
Buffer tank	~1-2 W @ 4.5 K	TCF20 -> 0.1 g/s
Transfer lines	~2 W @ 4.5 K	TCF20 -> 0.1 g/s

Install 200 litre LHe buffer tank: ensures > 8 hrs MD operation with beam @ 2K

Crab Cavity Cryogenics in the SPS

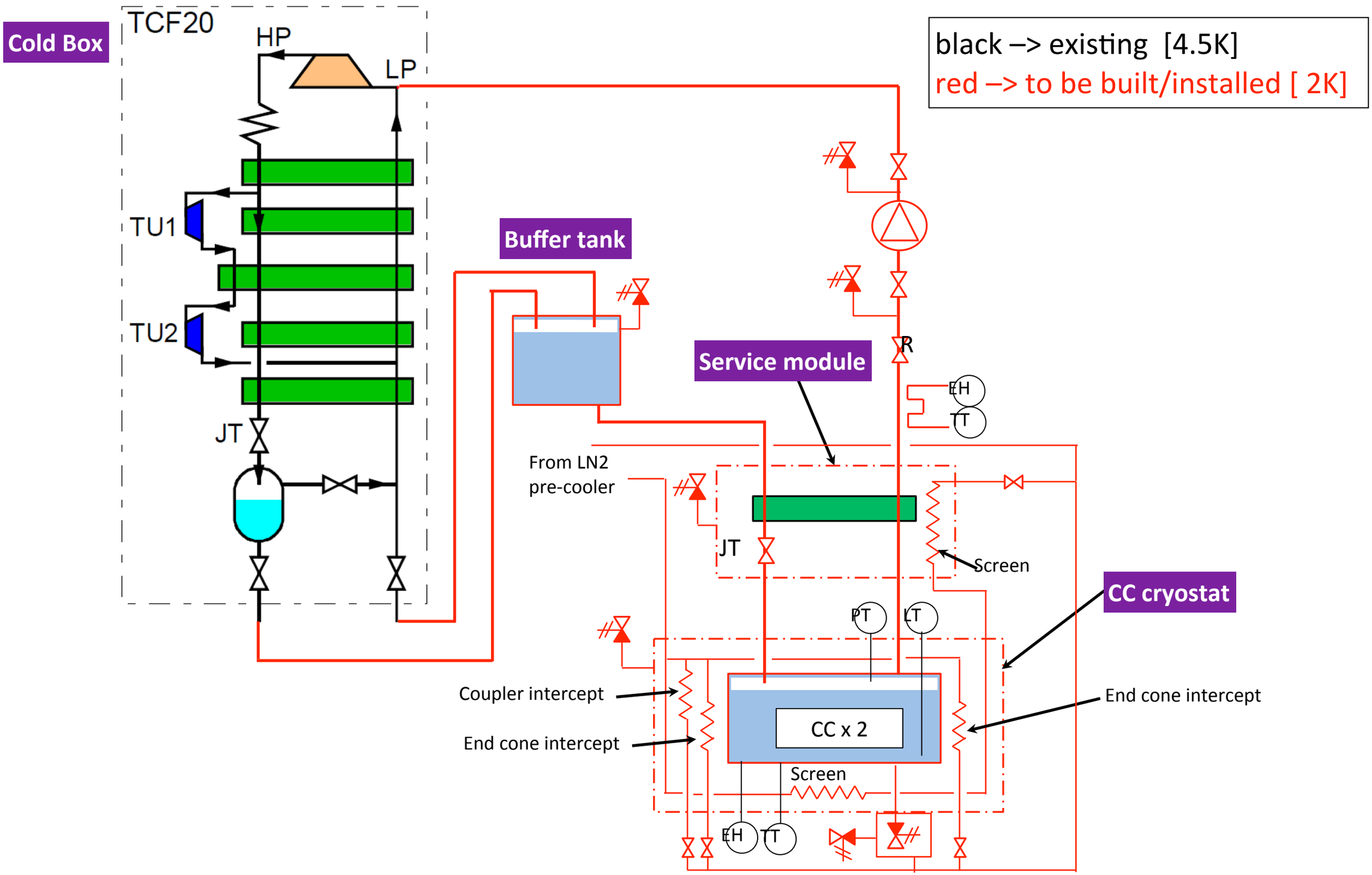

Cryogenics Layout

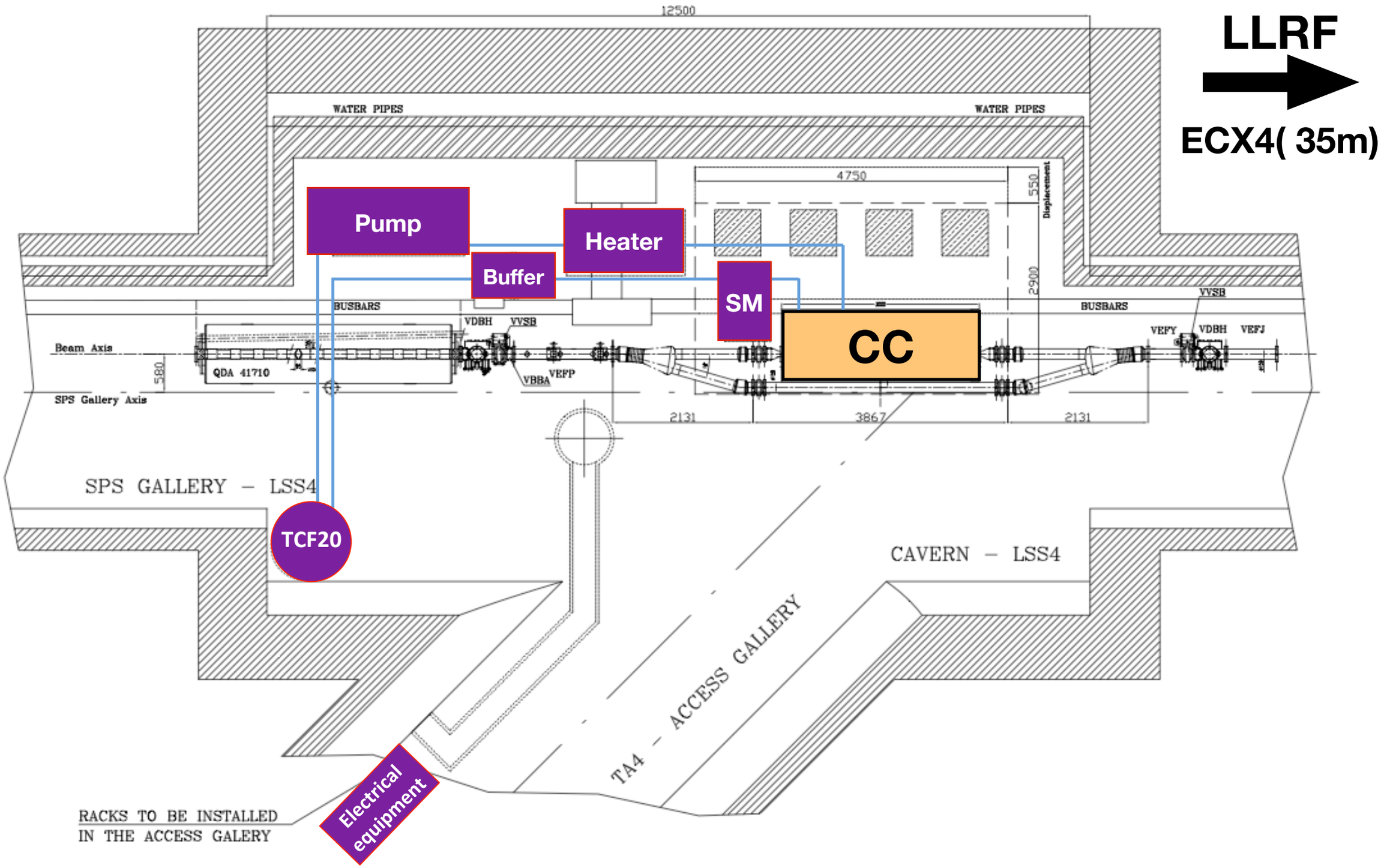

Cryogenics - infrastructure for real

SPS BA4 4.5 K cryogenics last used 8 years ago (COLDEX). Refurbishment + upgrade for 2 K – is underway

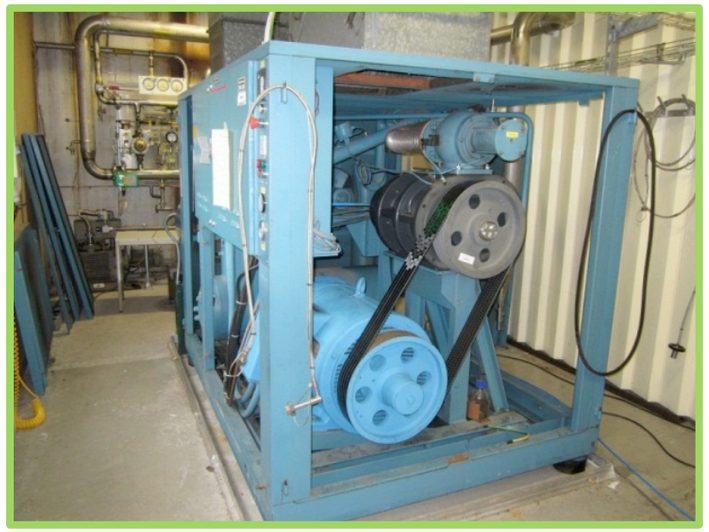

Renovated compressor + elec. motor

Revised, labeled and qualified pressure control system / oil removal system

New power supply panel for compressor station

TCF20 Cold box

2 K pumping groups recovered from AMS

Compact Crab Cavities - 3 Candidates

Kick Voltage = 3.3 MV	Operating Frequency = 400.790 MHz
Operating temperature: 2K	Residual Resistance $R_s \leq 10n\Omega$
Quality factors: $Q_0 \leq 10^{10}$	$10^5 \leq Q_{EXT} \leq 10^6$

Compact Crab Cavities - 3 Candidates

Kick Voltage = 3.3 MV **Operating Frequency = 400.790 MHz**

Operating temperature: 2K Residual Resistance $R_s \leq 10n\Omega$

Quality factors: $Q_0 \leq 10^{10}$ $10^5 \leq Q_{EXT} \leq 10^6$

LHC

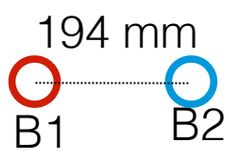

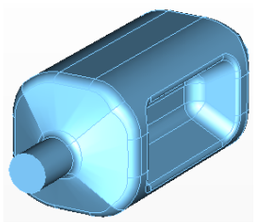

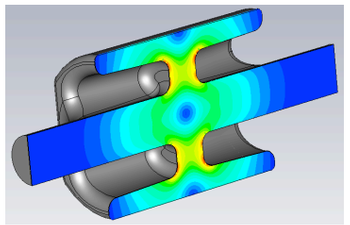

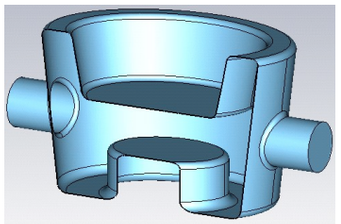

		Double Ridge	UK-4Rod	¼ Wave
Geometrical	Cavity Radius [mm]	**147.5**	**143/118**	**142/122**
	Cavity length [mm]	597	500	380
	Beam Pipe [mm]	84	84	84
RF	Peak E-Field [MV/m]	33	32	47
	Peak B-Field [mT]	56	60.5	71
	R_T/Q [W]	287	915	318
	Nearest Mode [MHz]	584	371-378	575

Compact Crab Cavities - 3 Candidates

UK-4Rod

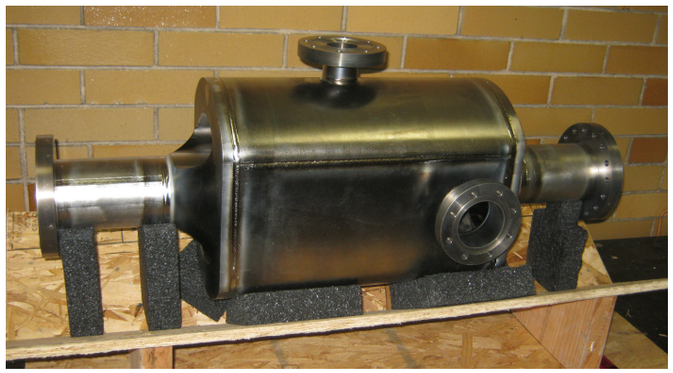

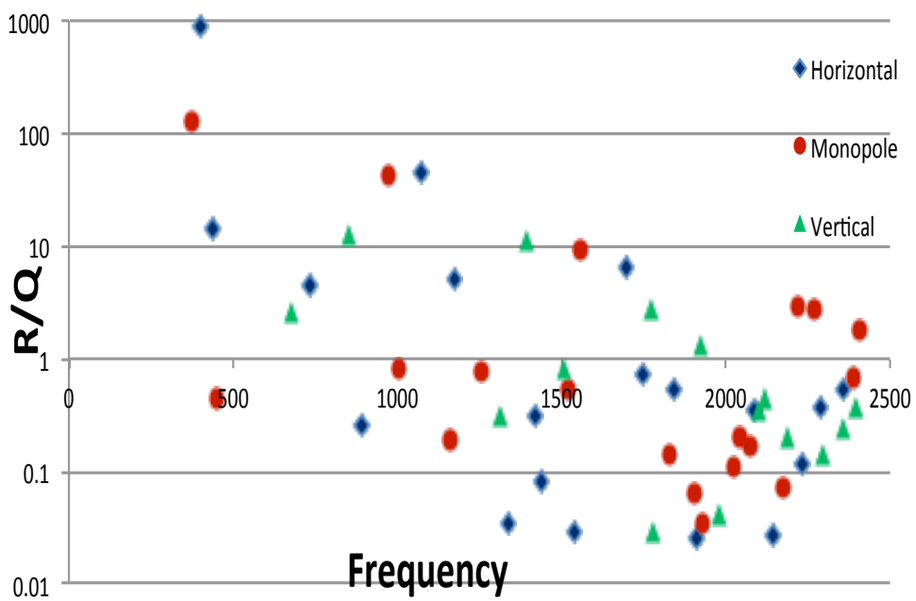

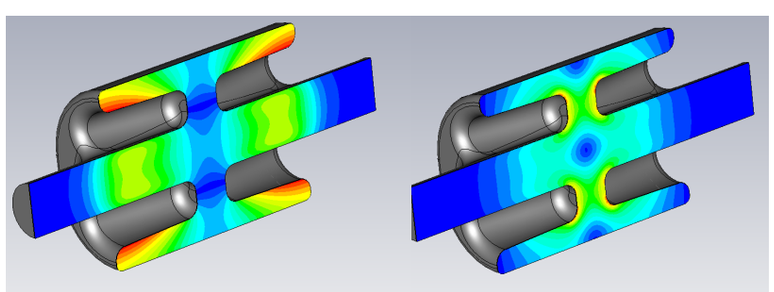

¼ Wave

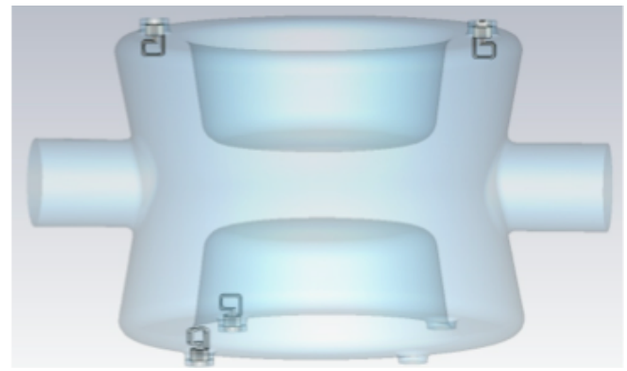

HOM frequency [GHz]	Mode Config.	R/Q [Ohm]
0.579	Longitudinal	108
0.671	Horizontal	70.5
0.700	Hybrid (y, z)	0.24/0.25
0.752	Deflection	34.9
0.800	Horizontal	6.02e-4
0.917	Horizontal	30.9
0.949	Longitudinal	28.1
1.080	Deflection	1.54
1.102	Horizontal	1.84e-3
1.114	Deflection	1.06
1.202	Horizontal	5.07e-2
1.247	Hybrid (y, z)	8.0e-2/6.0e-2
1.291	Deflection	10.0

Double Ridge

Operates in a TE-like mode

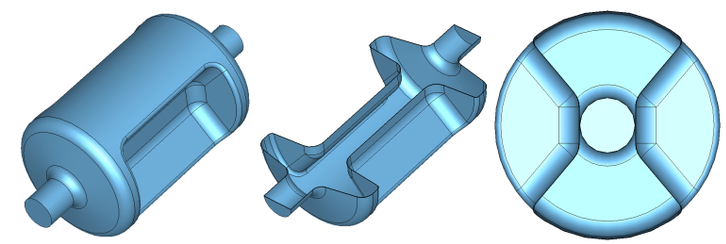

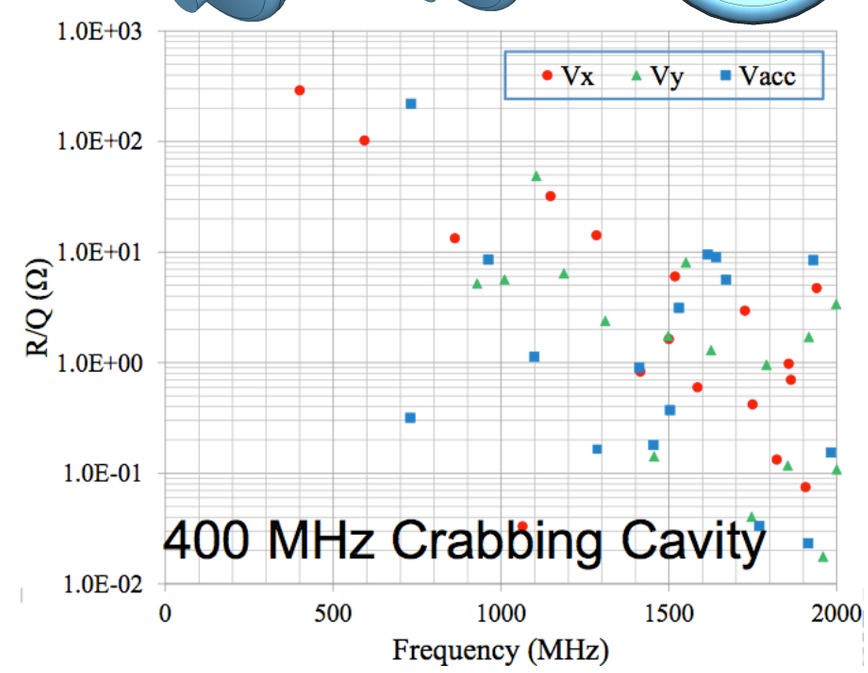

Cavity prototypes - not just on paper

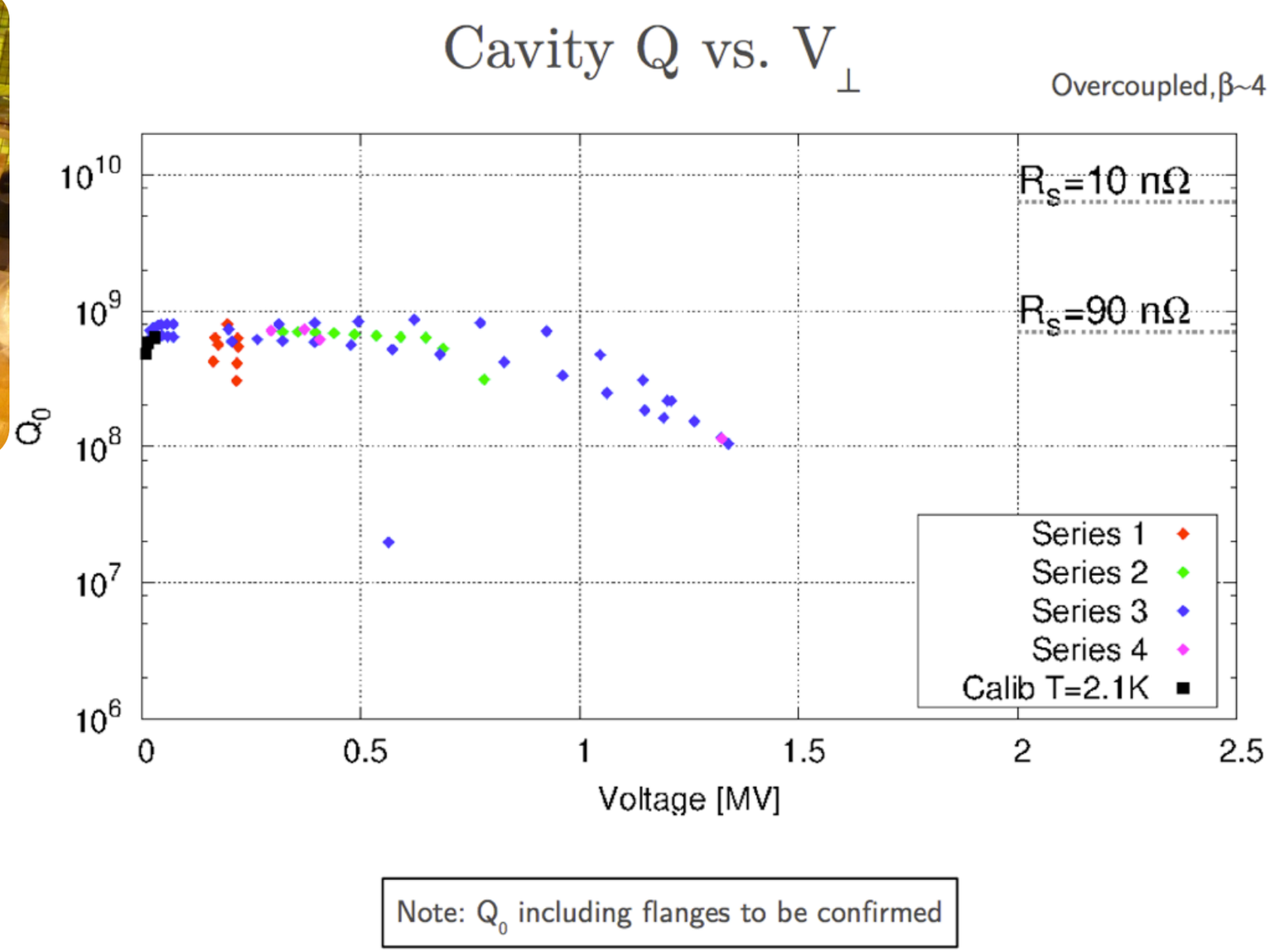

SM18 tests in Nov 2012 on UK-4Rod Cavity

Initial measurements with compromised vacuum of 10^{-5} mbar

Cavity prototypes - not just on paper

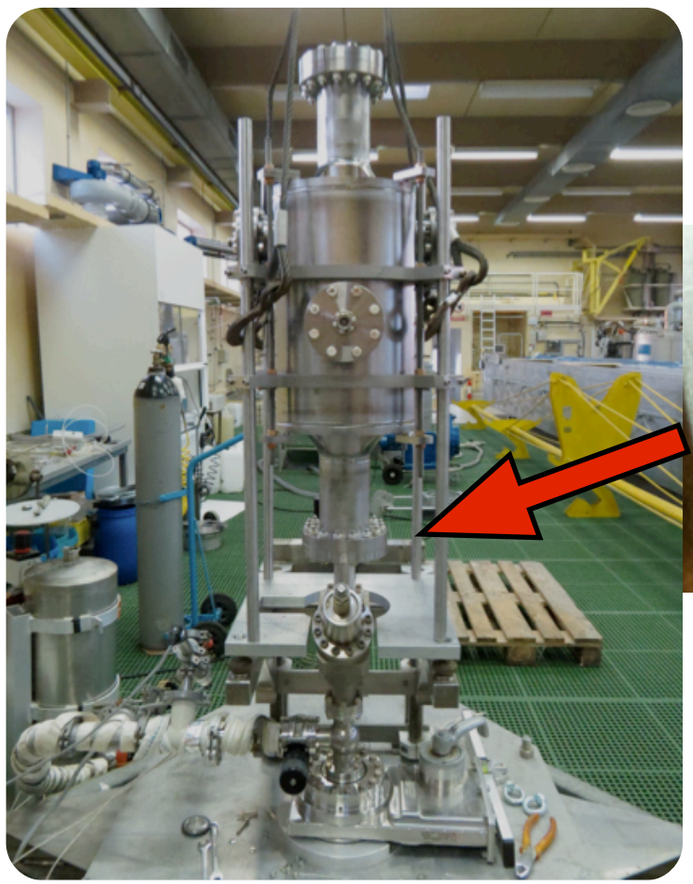

Leak on Flange

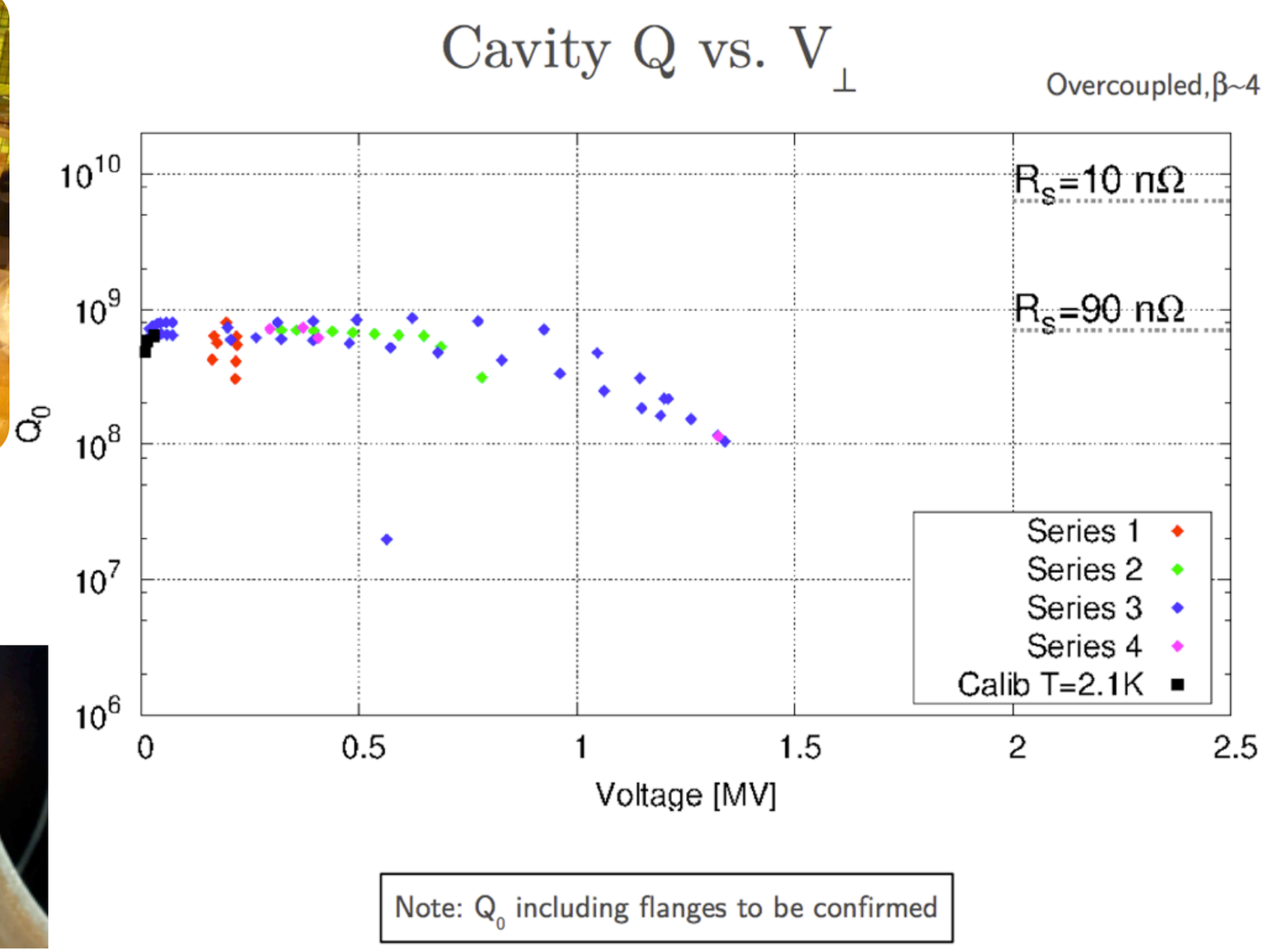

SM18 tests in Nov 2012 on UK-4Rod Cavity

Initial measurements with compromised vacuum of 10^{-5} mbar

Cavity Tuners

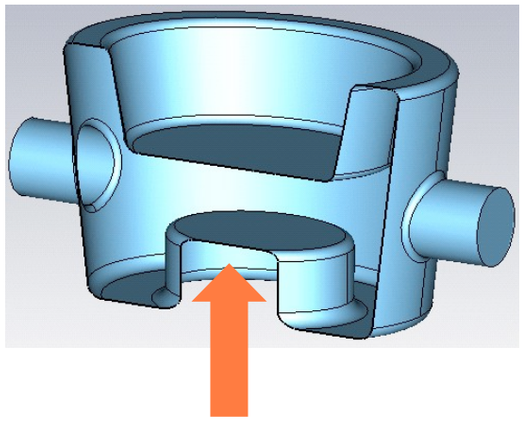

Up/down motion
± 2μm → 1 kHz

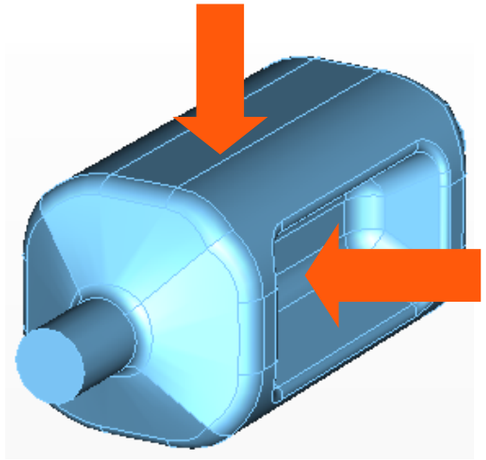

Push/pull on
cavity body

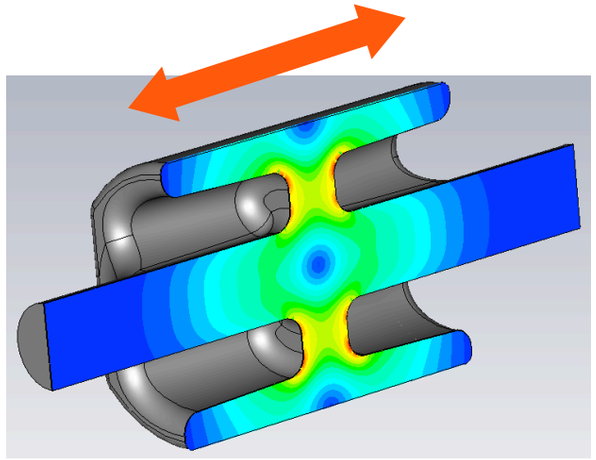

Scissor jack type
mechanism

Detuning range: LHC= ±5.5 kHz (half f_{rev}). Lorentz Detuning ~O(1MHz)

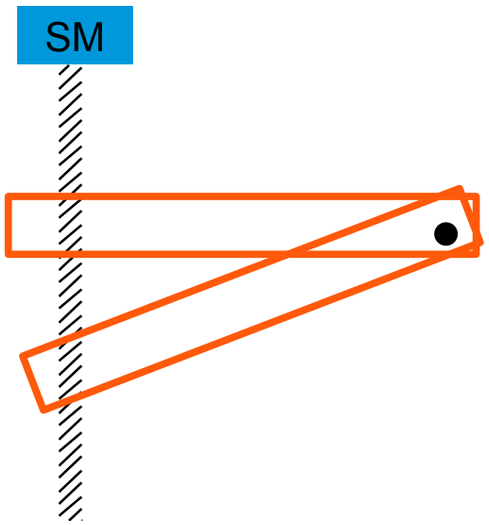

Double lever
(Saclay type)

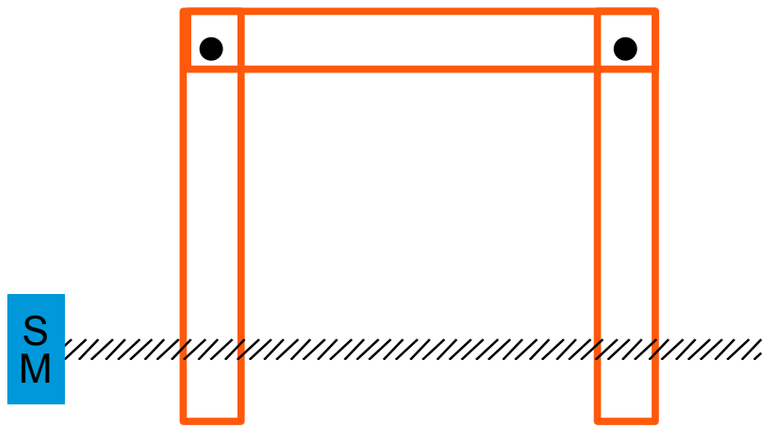

Modified screw/nut
(SOLEIL type)

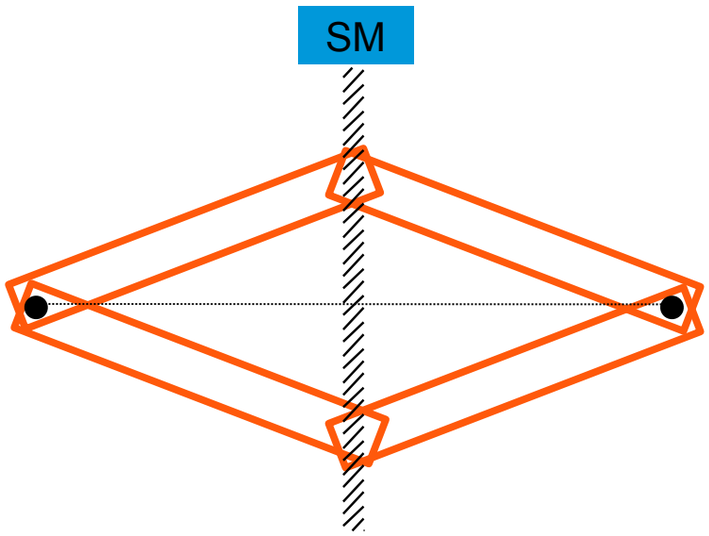

CEBAF Tuner

Cavity Tuners - Implementation

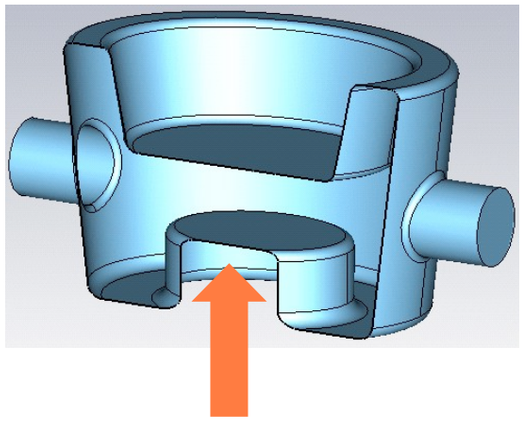

Up/down motion
± 2μm → 1 kHz

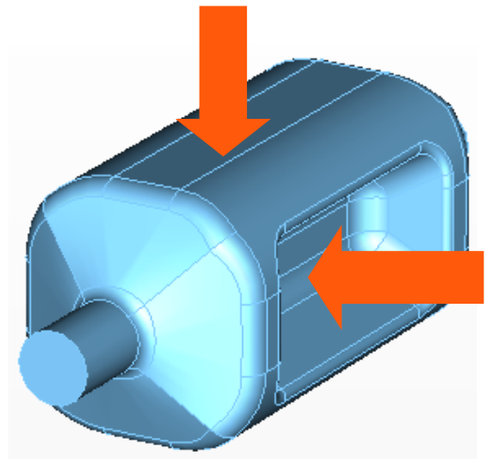

Push/pull on
cavity body

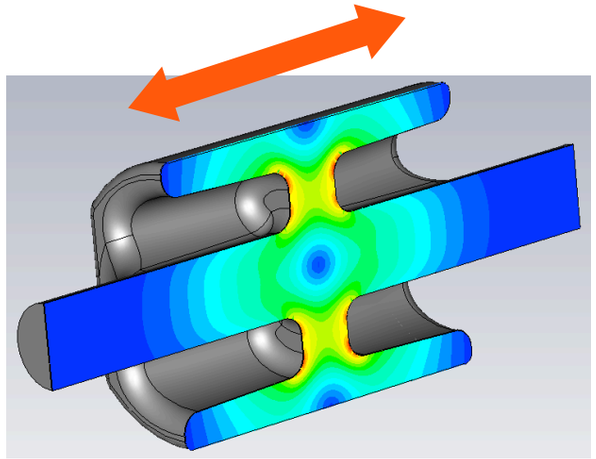

Scissor jack type
mechanism

=> Each cavity prototype requires its own cryomodule design

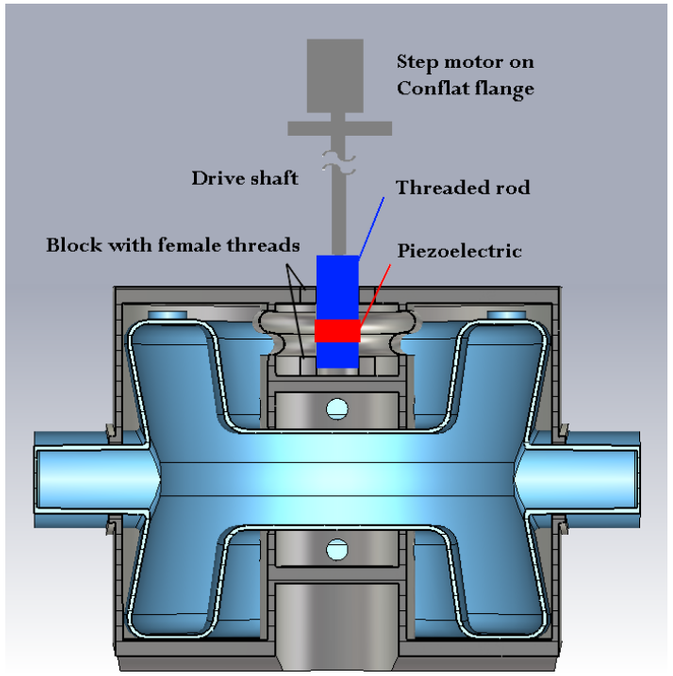

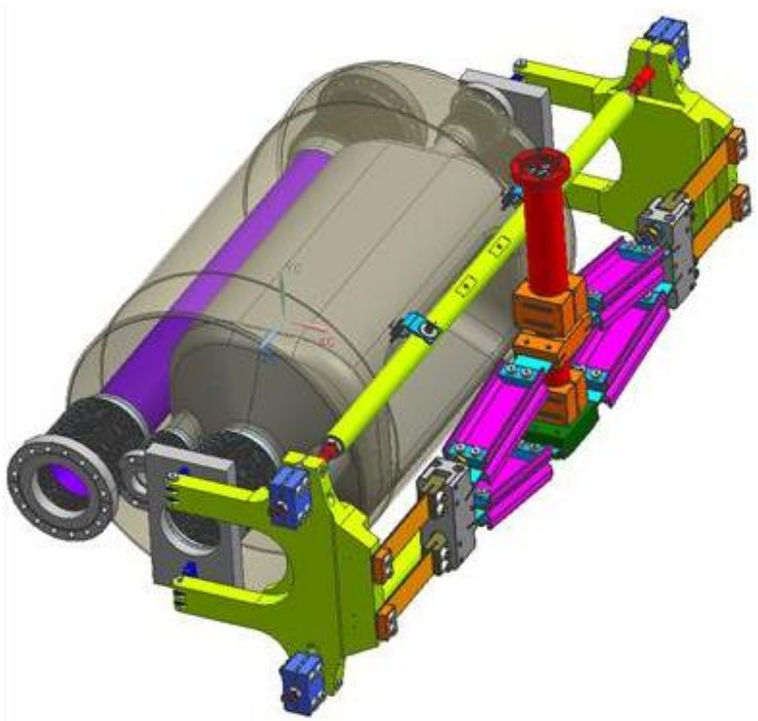

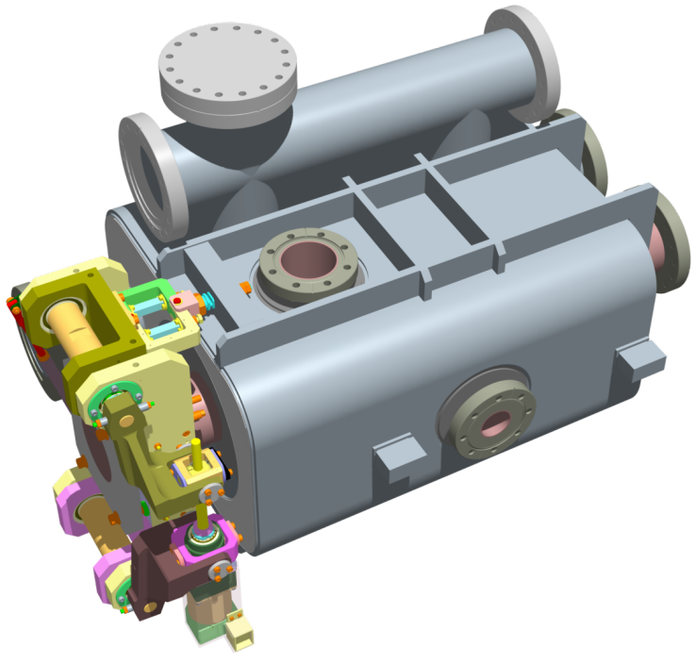

Cryomodule Design

SPS tests: 2 identical cavities in 1 cryomodule

- **Cryo modules for SPS not final LHC design**
- Cryogenic and power coupler ports to be top mounted
- SPS integration imposes design restrictions

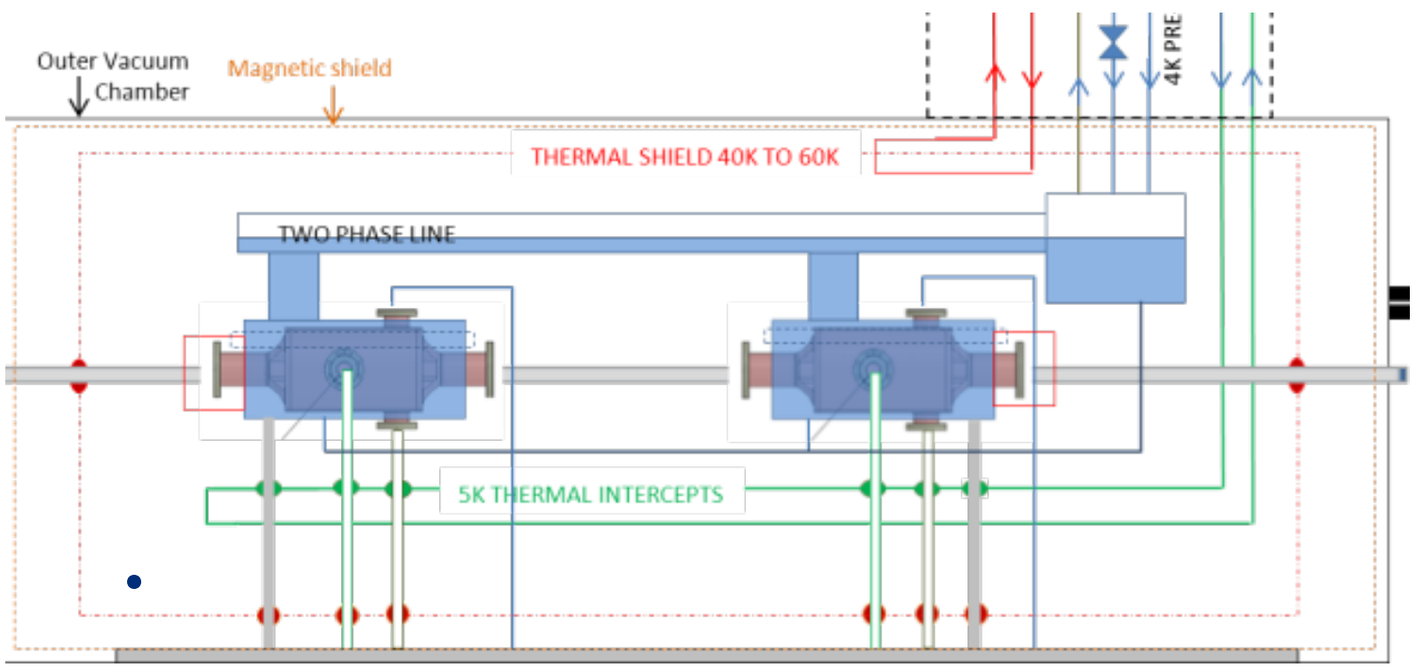

Cryomodule Design

SPS tests: 2 identical cavities in 1 cryomodule

- **Cryo modules for SPS not final LHC design**
- Cryogenic and power coupler ports to be top mounted
- SPS integration imposes design restrictions

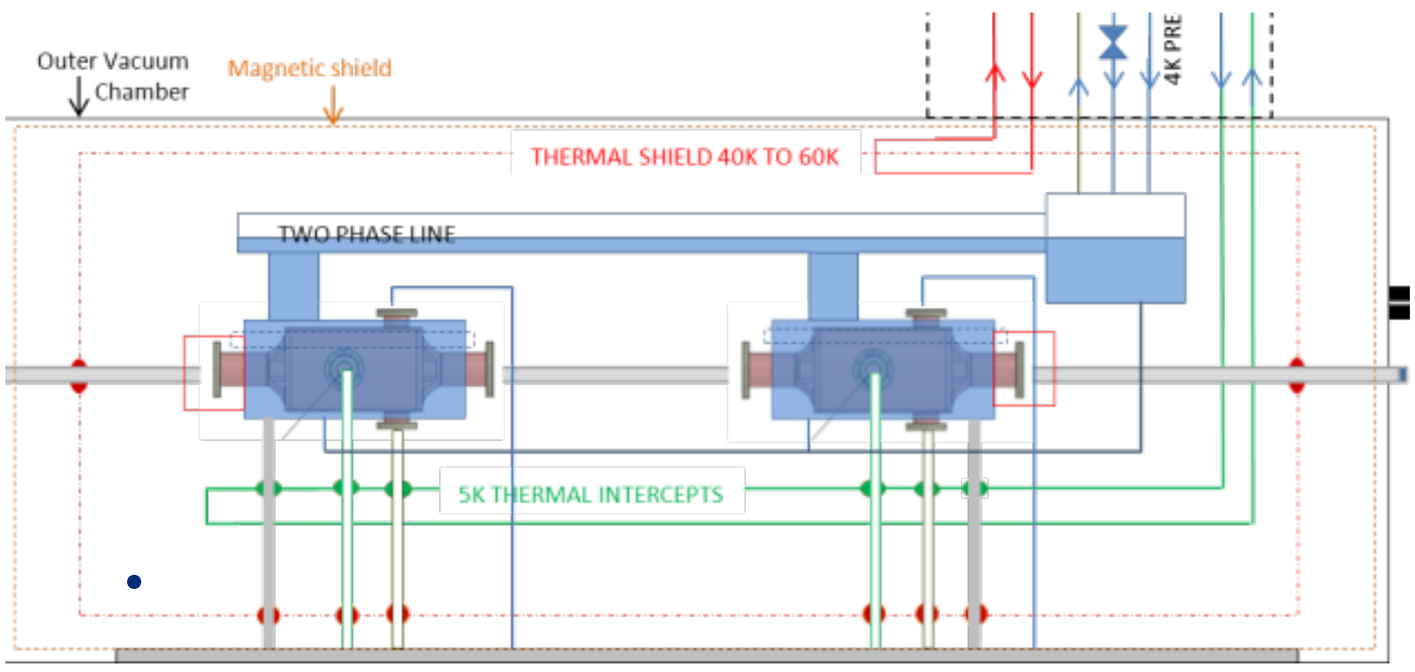

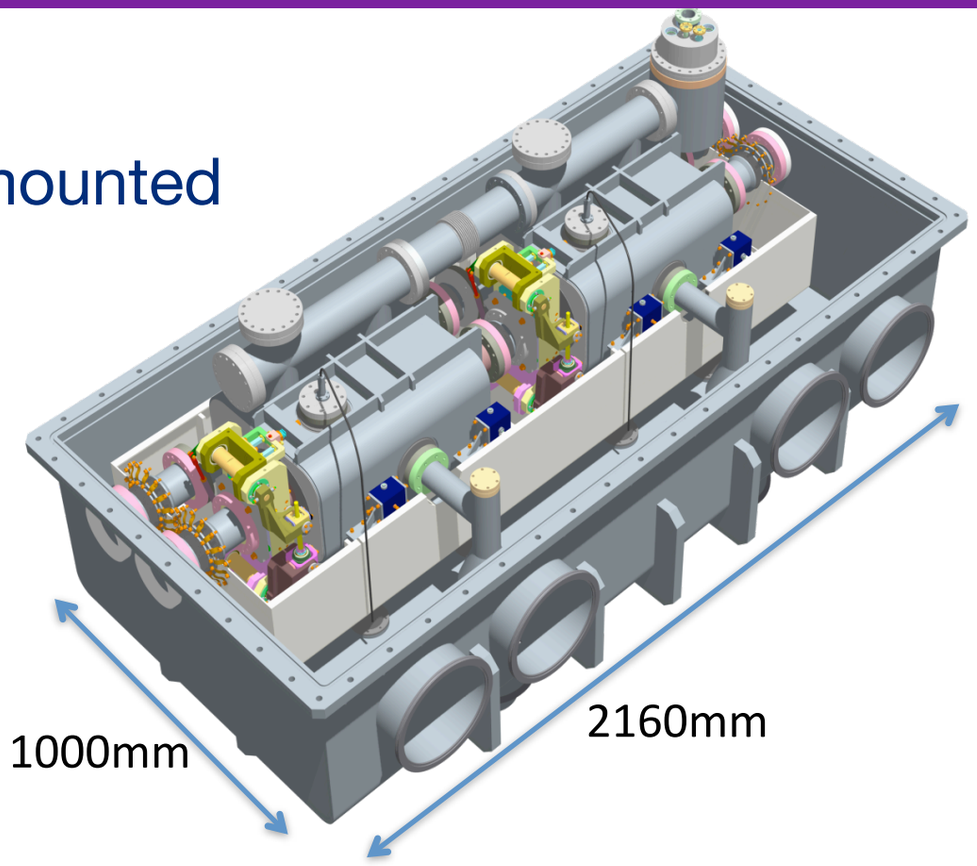

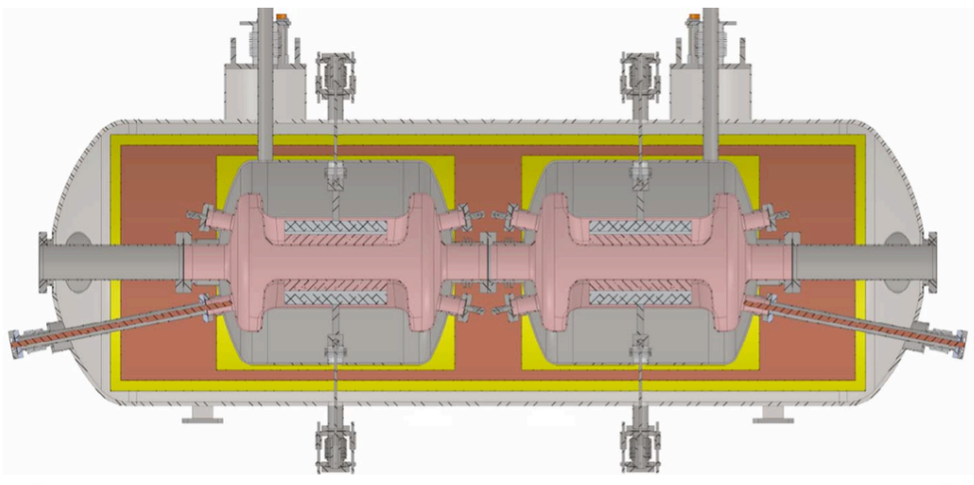

~3000mm

Cryomodule Design

SPS tests: 2 identical cavities in 1 cryomodule

- **Cryo modules for SPS not final LHC design**
- Cryogenic and power coupler ports to be top mounted
- SPS integration imposes design restrictions

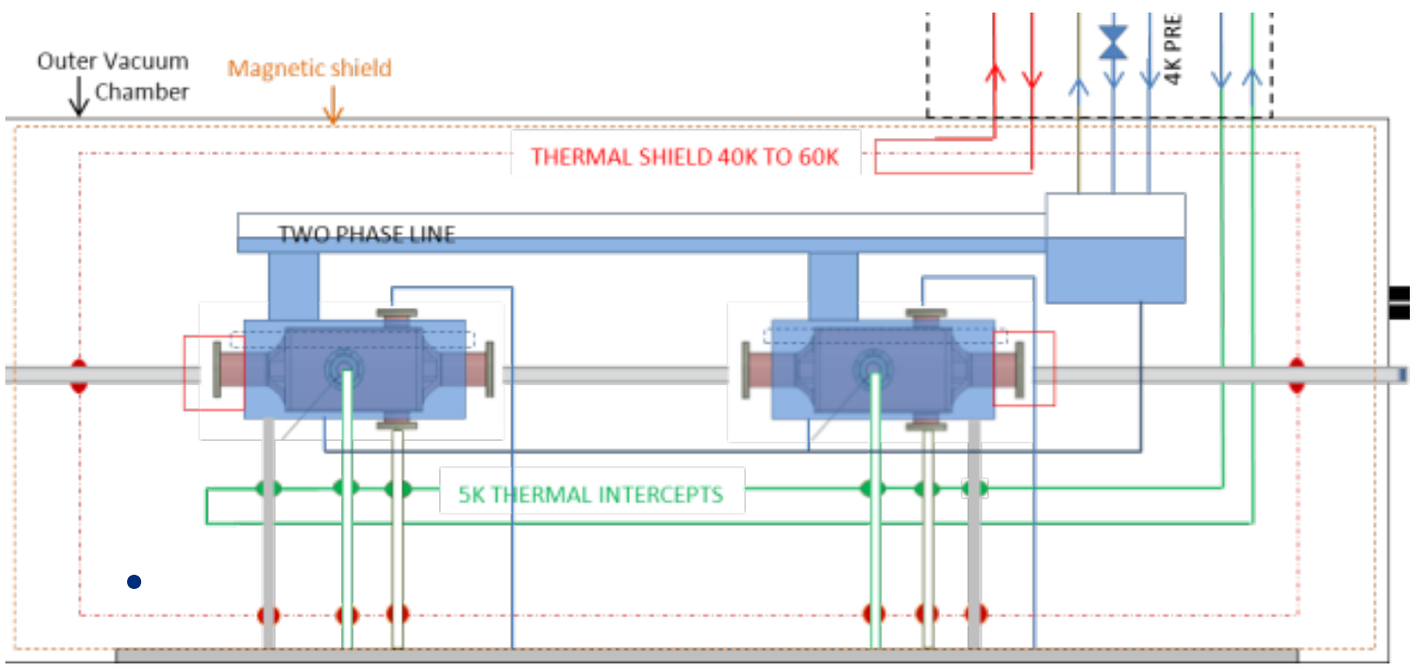

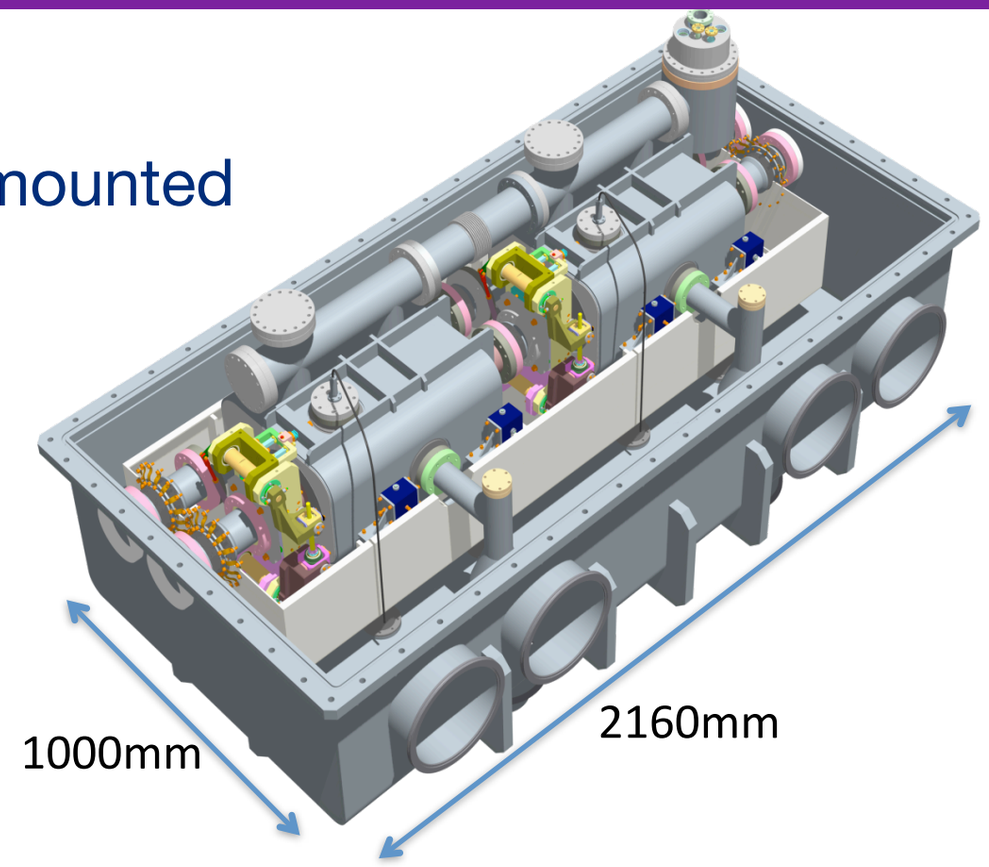

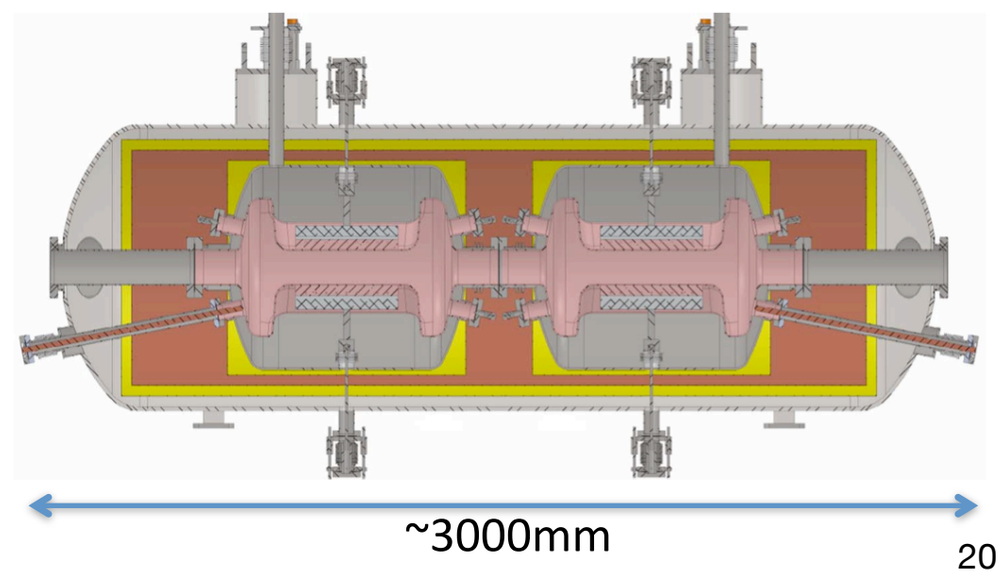

- **LHC Alignment tolerances :**
  - Cavity tilt: Transverse -> 50 mrad (0.3°)
  - Cavity tilt: Longitudinal -> 1mrad
  - Transverse inter-cavity alignment: 0.7mm

Fundamental Power coupler

- **Fundamental power coupler: Design nearing completion**
  - **2 Cavity type with E-field coupling, 1 with B-field coupling**
- **Power coupler fabrication and testing take time**
  - **Not expected before Q2 of 2015**

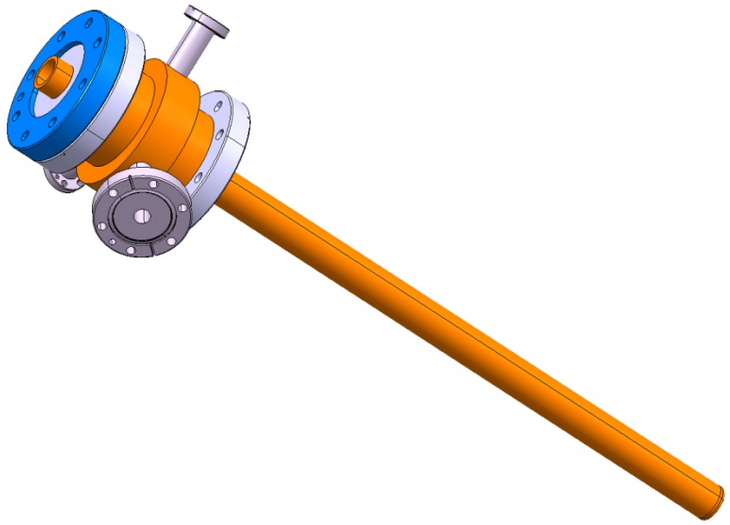

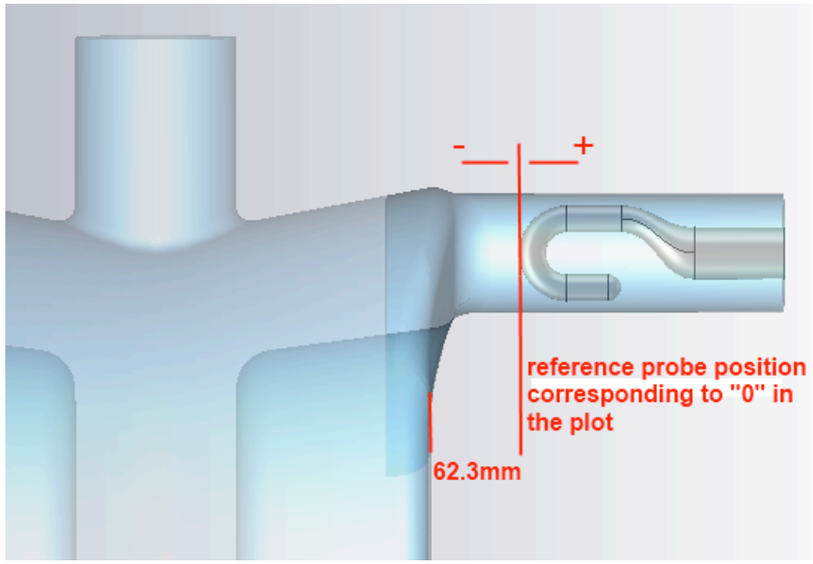

Fundamental Power coupler

- **Fundamental power coupler: Design nearing completion**
  - **2 Cavity type with E-field coupling, 1 with B-field coupling**
- **Power coupler fabrication and testing take time**
  - **Not expected before Q2 of 2015**

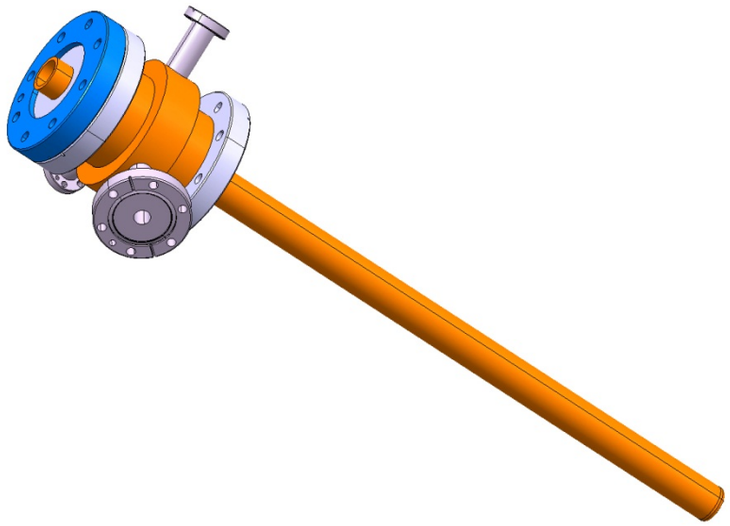

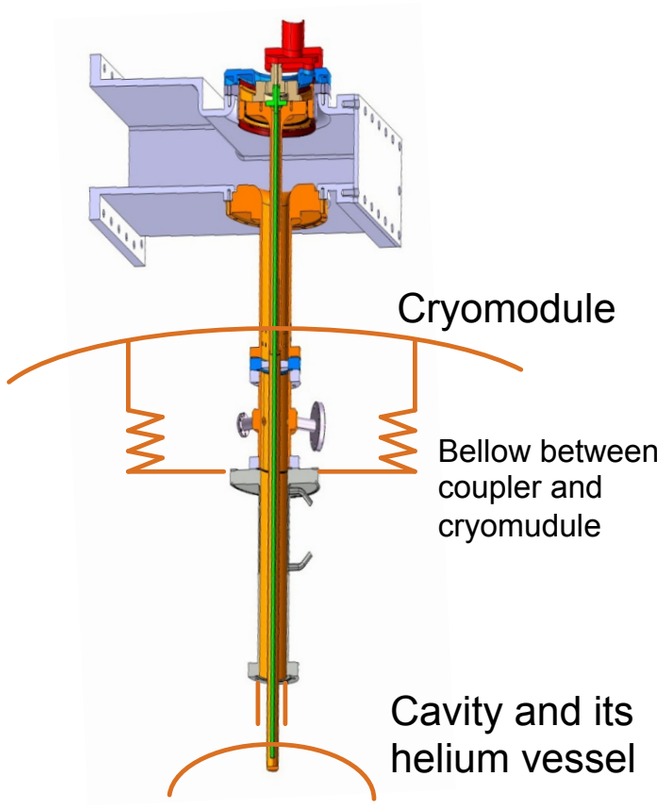

Interface to cryo module still being resolved

Assembly constraint: connection from top =>Cavity must be able to support coupler weight (with WG) [~35 kg]

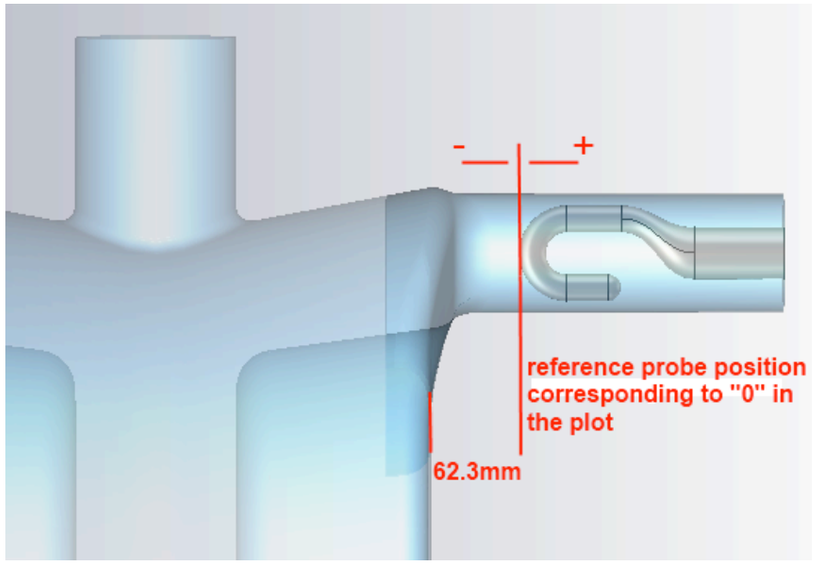

RF Power

- **RF amplifier: One 400 MHz - 50 kW SPS Tetrode per cavity**
- **TX power vs. Q_{EXT}**

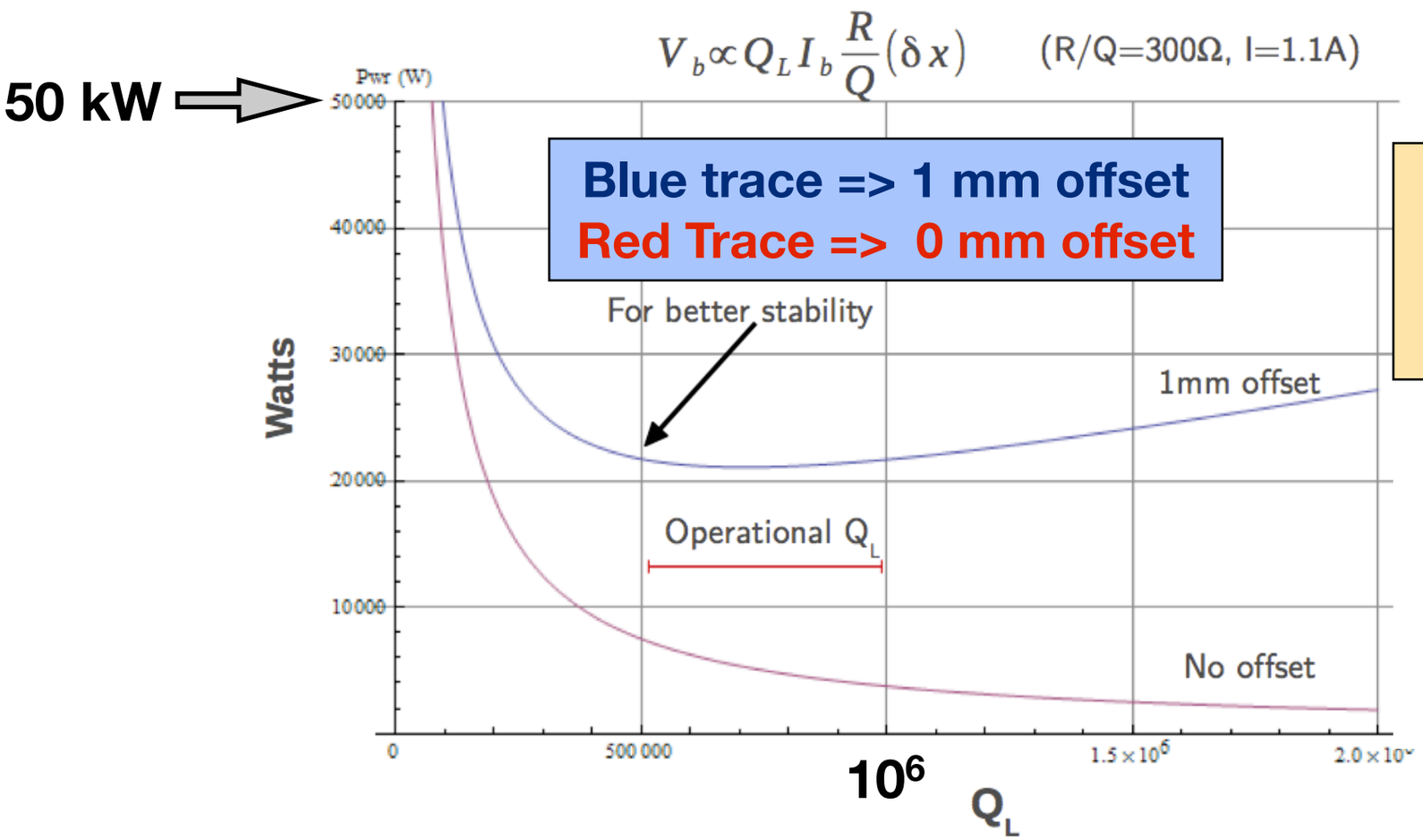

1 mm offset: power is "flat" at ~Q_{EXT} in 25 kW range for Q_{EXT} in [4×10^6, 1.5×10^6]

<u>Inter Cavity Alignment</u>
1mm tolerance is OK for power converter in a reasonable Q_{EXT} range

RF Power

- **RF amplifier: One 400 MHz - 50 kW SPS Tetrode per cavity**
- **TX power vs. Q_{EXT}**

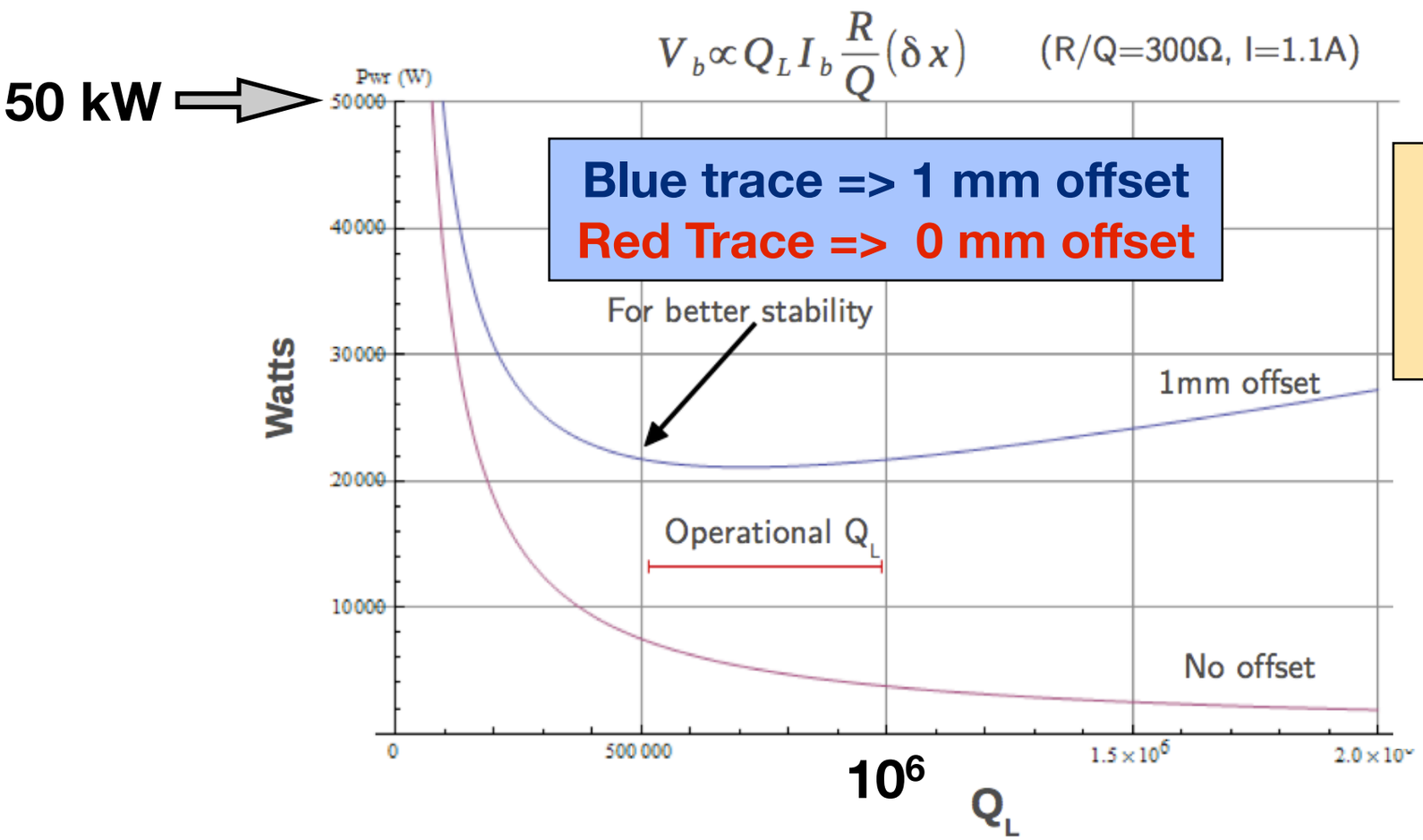

1 mm offset: power is "flat" at ~Q_{EXT} in 25 kW range for Q_{EXT} in [4×10^6, 1.5×10^6]

<u>Inter Cavity Alignment</u>
1mm tolerance is OK for power converter in a reasonable Q_{EXT} range

Machine protection

If $Q_{EXT} = 10^6$ => $\tau_{Voltage}$ ~800μs while $T_{Beam\ dump}$ = ~ 3 LHC turns ~ 270μs
=> Most failure modes slow (due to Q_L) => OK for LHC beam dump system
=> For fast failure, look to nested feed back loops to mitigate failure

Multiple Cavity Control and MP algorithms: LLRF

LHC

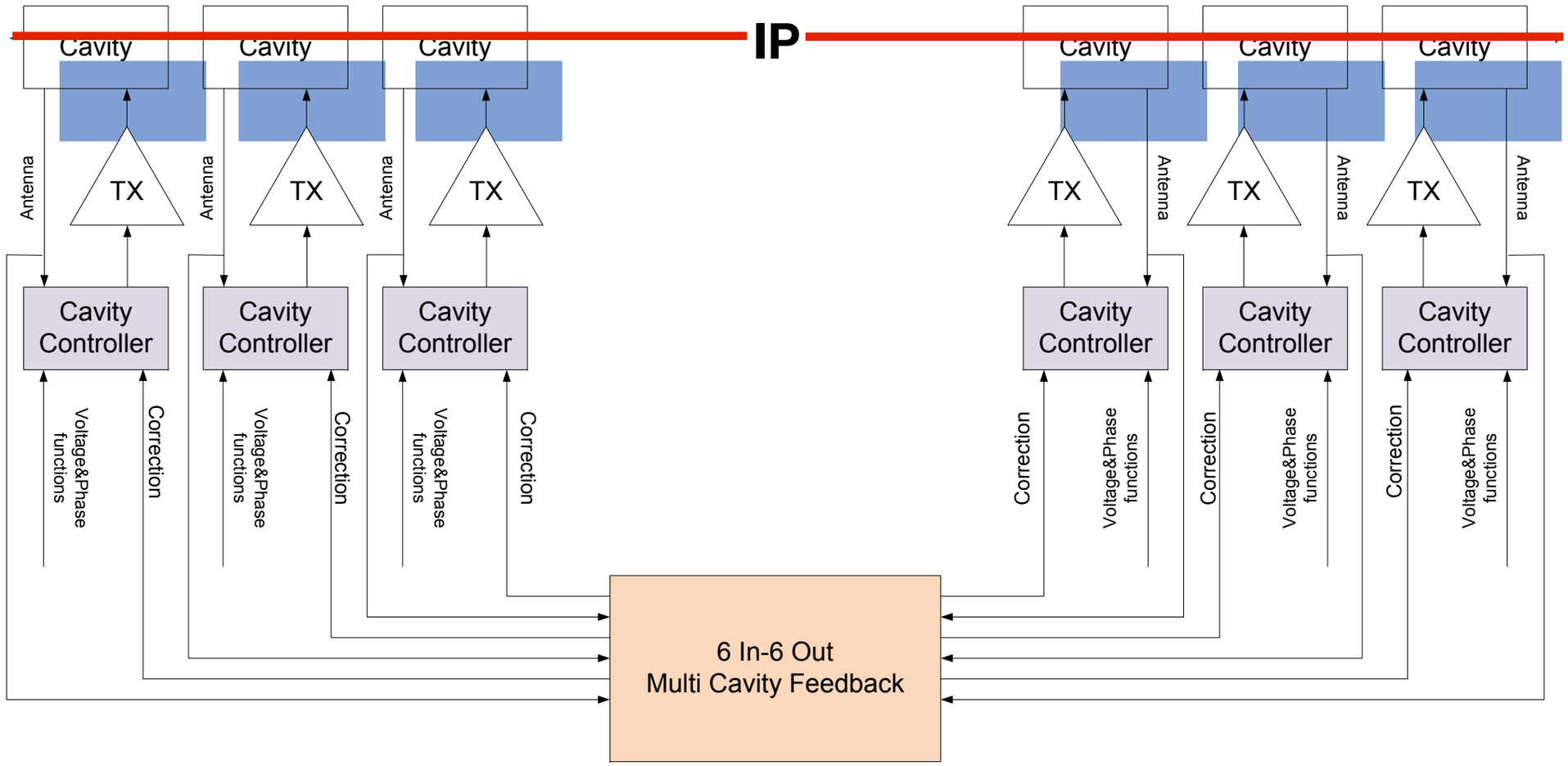

- **Cavity Controller**: Strong feedback to regulate individual cavities
  - Feedback loop delay < 1μs
- **Global Feedback**: regulates crabbing-uncrabbing & MPS mitigations
  - Feedback loop delay ~5 μs << 1 LHC turn

LHC Control loops and MPS algorithms to be developed and tested in SPS

Schedule - Longer term view

	J	F	M	A	M	J	J	A	S	O	N	D
2011		1	2	3	4	5	6	7	8	9	IONS	
2012			1	2	3	4	5	6	7	8	9	
2013	IONS	IONS	LS1 - SPLICE CONSOLIDATION									
2014												
2015	RECOM	RECOM	RAMP-UP	1	2	SCRUB 25 ns	3	4	5	6	IONS	
2016		RAMP-UP	1	2	3	4	5	6	7	8	IONS	
2017		RAMP-UP	1	2	3	4	5	6	7	8	IONS	
2018	LS2 (LIU UPGRADE: LINAC4, BOOSTER, PS, SPS...)											
2019	RECOM	RECOM	RAMP-UP	1	2	3	4	5	6	7	IONS	
2020		RAMP-UP	1	2	3	4	5	6	7	8	IONS	
2021		RAMP-UP	1	2	3	4	5	6	7	8	IONS	
2022	HL-LHC UPGRADE											

SPS validation run 2016 & 2017?

- Technical stop or shutdown
- Proton physics
- Ion Physics
- Recommissioning
- Intensity ramp-up

Schedule - Longer term view

	J	F	M	A	M	J	J	A	S	O	N	D
2011		1	2	3	4	5	6	7	8	9	IONS	
2012			1	2	3	4	5	6	7	8	9	
2013	IONS	IONS	LS1 - SPLICE CONSOLIDATION									
2014												
2015	RECOM	RECOM	RAMP-UP	1	2	SCRUB 25 ns	3	4	5	6	IONS	
2016		RAMP-UP	1	2	3	4	5	6	7	8	IONS	
2017		RAMP-UP	1	2	3	4	5	6	7	8	IONS	
2018	LS2 (LIU UPGRADE: LINAC4, BOOSTER, PS, SPS...)											
2019	RECOM	RECOM	RAMP-UP	1	2	3	4	5	6	7	IONS	
2020		RAMP-UP	1	2	3	4	5	6	7	8	IONS	
2021		RAMP-UP	1	2	3	4	5	6	7	8	IONS	
2022	HL-LHC UPGRADE											

SPS validation run 2016 & 2017?

Final Design and production

- Technical stop or shutdown
- Proton physics
- Ion Physics
- Recommissioning
- Intensity ramp-up

Schedule up to Installation in the SPS

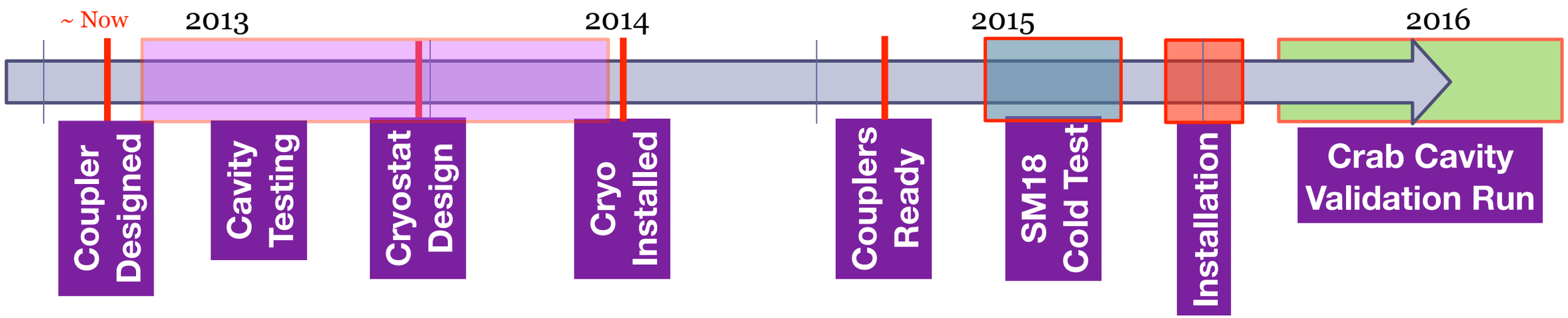

- Power coupler design completed: **Q1 of 2013**
- SM18 - Vertical tests of prototype cavities: **start Q2 of 2013**
- Cryostat design ready: **End of 2013**
- Cryogenic infrastructure installed in SPS LSS4 : **End of SPS LS1**
- Cabling infrastructure in SPS: **Q1 of 2014**
- Power Couplers available for cryostat: **Q1 of 2015**
- Cryomodule fully dressed: **Q2 of 2015**
- SM18 - Cryomodule fully tested: **Q3 of 2015**
- Cryomodule installed in SPS in December: **2015-2016 Christmas stop**.
- Crab Cavity validation MDs: **SPS Run 2016**

SPS Crab Cavity Run Issues ...

- **Assembly: Long leadtime on materials/design.** Power coupler & cryomodule
- **RF Power Amplifers (SPS Tetrodes) & cabling (BA4->ECX4->LSS4)**:
  - Refurbishment of existing amplifiers and cables. Managed within RF group
- **Cryogenics**
  - Liquefaction capacity and heat loads need to be benchmarked (June 2013)
  - Reliability TCF20 needs to be assessed
- **Safety**:
  - Understand constraints to move cryomodule in/out of beam line
- **Instrumentation**:
  - Mostly use existing SPS instrumentation: Need to confirm any LS1 requests
- **Machine Protection**:
  - Ensure simulations and LLRF mitigation algorithms match MPS requirements

Summary

- **Cavities:**
  - Compact cavity designs: 3 mature designs. Prototypes build &being tested
  - Focusing now on design of cryomodule, power coupler and infrastructure

- **SPS validation of crab cavities seen as essential**
  - SPS tests scheduled for 2016 (& possibly 2017)
  - Schedule: **Overall schedule is extremely tight ...**
  - Earliest feasible installation date: **Installation in 2015 Christmas stop**
    - Need to assess Cryomodule delivery date and post-LS1 SPS schedule ...
  - SPS location (LSS4) has some concerns (aperture, cryo capacity, Y-chamber)

- **Selection of final cavity design**: **based on SM18 + SPS performance**
  - Foresee exchange of cavity types in SPS=> understand SPS+LHC schedule
    - Can a cryo module be exchanged in an SPS technical stop (5 days)?

- **Essential milestones**
  - Crabbing functionality, invisibility of detuned cavity, Machine protection algos