Radiofrequency Multipoles in LHC Crab Cavities

María Navarro-Tapia Alexej Grudiev Rama Calaga

Radiofrequency Group, Beams Department
CERN, Geneva (Switzerland)

Fourth RFTech Workshop

Crab Cavities. Contextual Framework

Crab Cavity (CC) system subject to:

- Transverse space constraints.
- RF requirements.

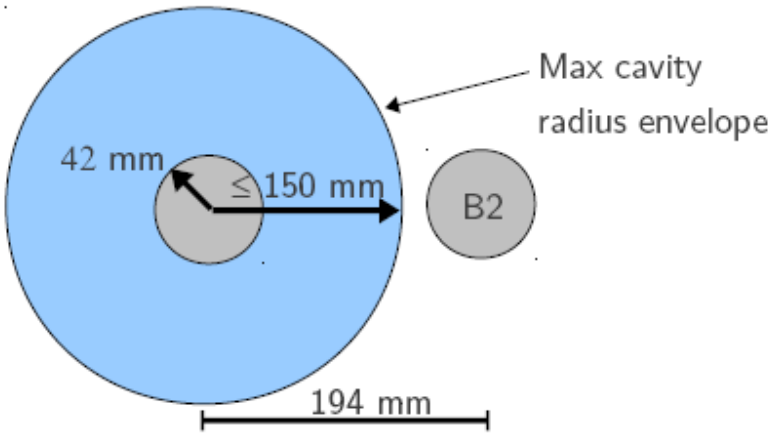

Compact CC Designs

Non-traditional shapes, far from the classic elliptical ones

LHC Crab Cavities under Consideration

RF dipole

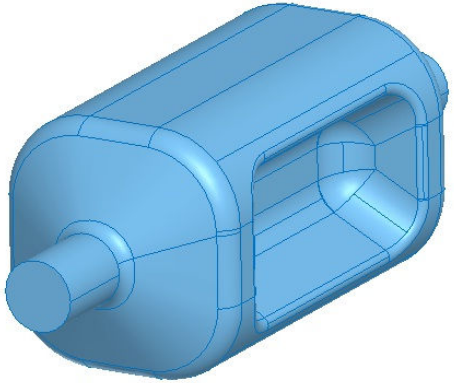

Courtesy of
Z. Li, J. Delayen *et al.*
ODU/SLAC

$\frac{1}{4}$-wave

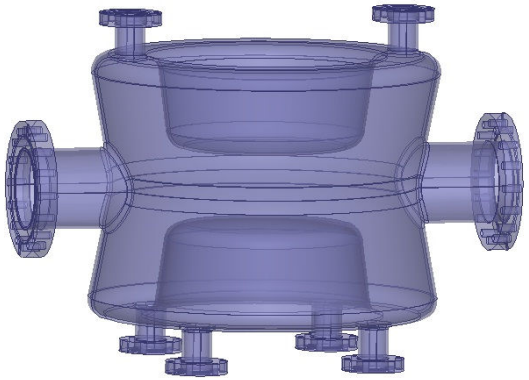

I. Ben-Zvi *et al.*
BNL

4-rod

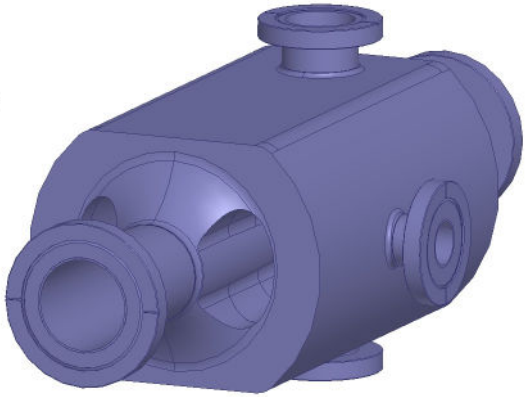

G. Bull, B. Hall
UK

Non-axial symmetry

Higher order multipolar components of the main deflecting mode

RF-kicks influencing the beam dynamics

LHC Crab Cavities under Consideration

RF dipole

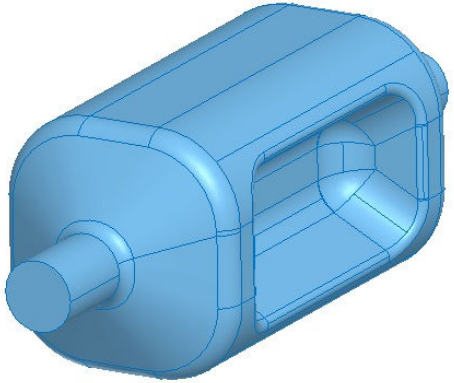

Courtesy of
Z. Li, J. Delayen *et al.*
ODU/SLAC

$\frac{1}{4}$-wave

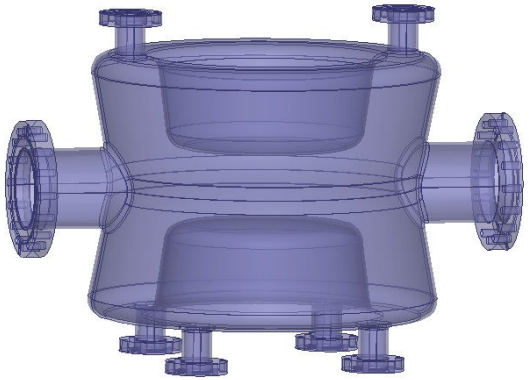

I. Ben-Zvi *et al.*
BNL

4-rod

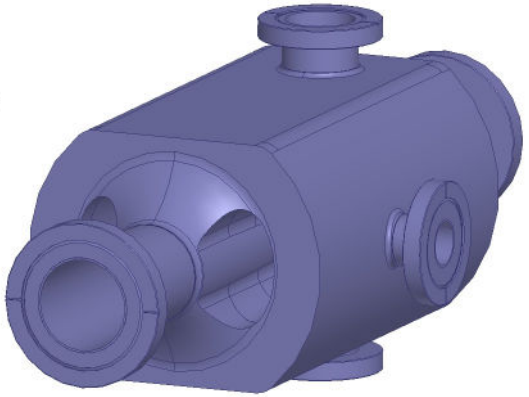

G. Bull, B. Hall
UK

Non-axial symmetry

Higher order multipolar components of the main deflecting mode

RF-kicks influencing the beam dynamics

LHC Crab Cavities under Consideration

RF dipole

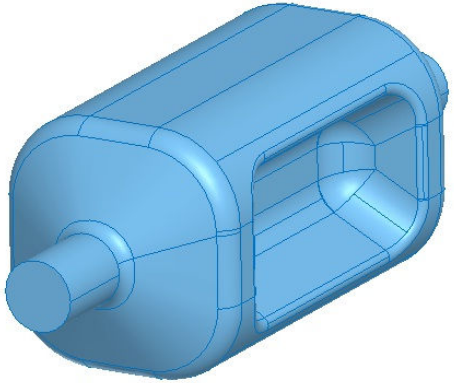

Courtesy of
Z. Li, J. Delayen *et al.*
ODU/SLAC

$\frac{1}{4}$-wave

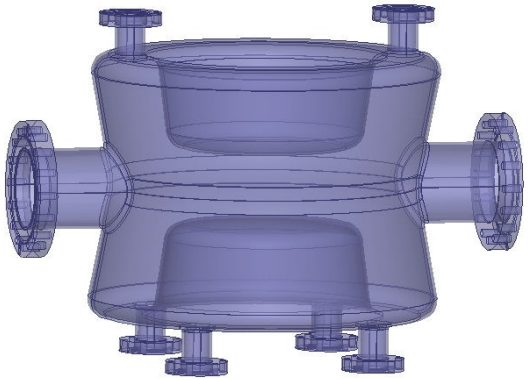

I. Ben-Zvi *et al.*
BNL

4-rod

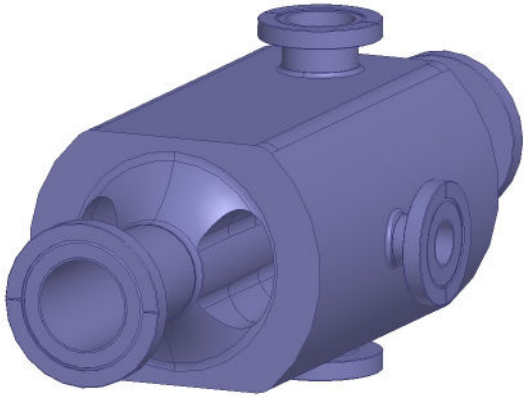

G. Bull, B. Hall
UK

Non-axial symmetry → Higher order multipolar components of the main deflecting mode

RF-kicks influencing the beam dynamics

LHC Crab Cavities under Consideration

RF dipole

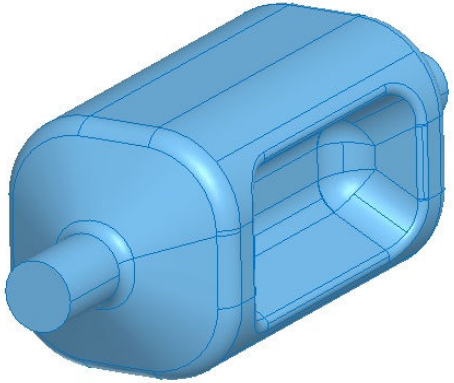

Courtesy of
Z. Li, J. Delayen *et al.*
ODU/SLAC

$\frac{1}{4}$-wave

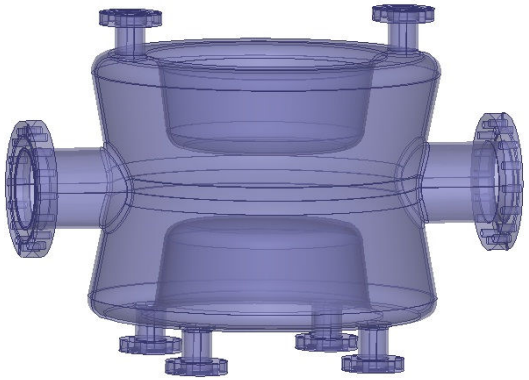

I. Ben-Zvi *et al.*
BNL

4-rod

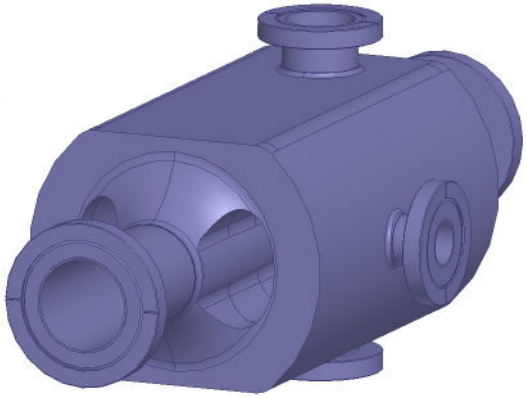

G. Bull, B. Hall
UK

Non-axial symmetry → Higher order multipolar components of the main deflecting mode → RF-kicks influencing the beam dynamics

LHC Crab Cavities under Consideration

RF dipole

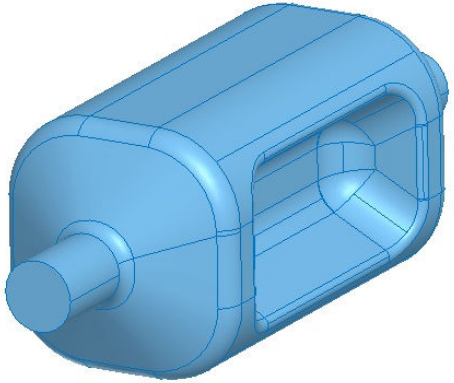

Courtesy of
Z. Li, J. Delayen *et al.*
ODU/SLAC

$\frac{1}{4}$-wave

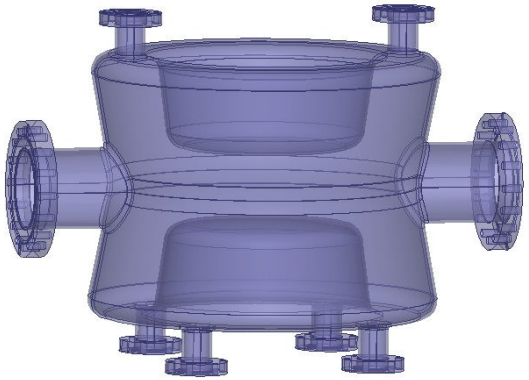

I. Ben-Zvi *et al.*
BNL

4-rod

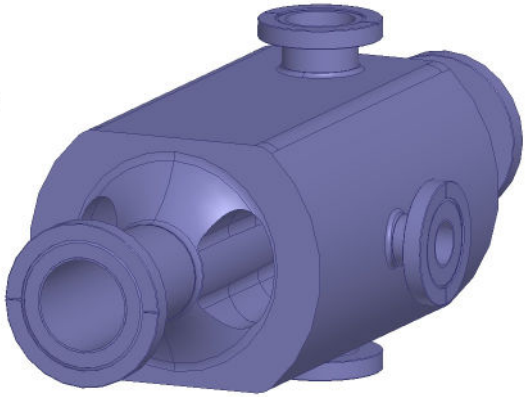

G. Bull, B. Hall
UK

Non-axial symmetry

Higher order multipolar components of the main deflecting mode

RF-kicks influencing the beam dynamics

Motivation and Objectives

Latest geometries

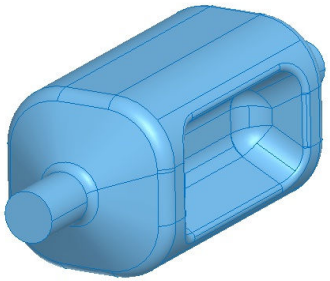

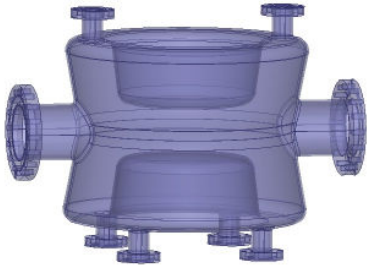

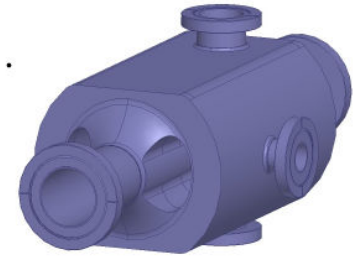

Aim of this work

- Study of the **multipolar error** on the **updated cavities**.
  - Assess the strengths of the higher-order terms.
  - Propose some mitigation techniques, once known the tolerance from the beam-dynamic study.
- **Experimental verification** of the RF multipolar components for the crab cavities under study, by means of **bead-pull measurements**.

Motivation and Objectives

Latest geometries

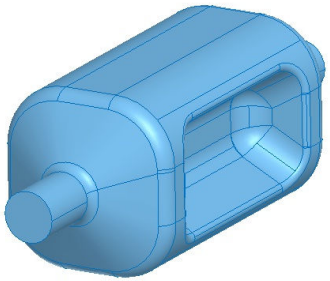

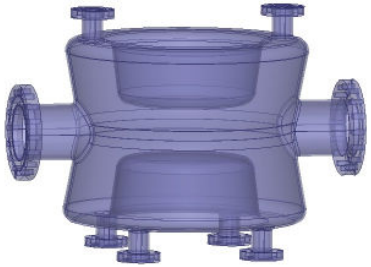

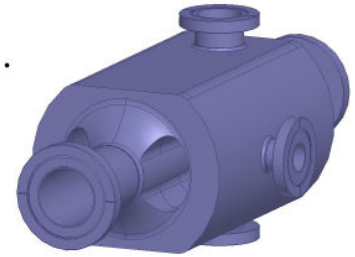

Aim of this work

- Study of the **multipolar error** on the **updated cavities**.
  - Assess the strengths of the higher-order terms.
  - Propose some mitigation techniques, once known the tolerance from the beam-dynamic study.
- **Experimental verification** of the RF multipolar components for the crab cavities under study, by means of **bead-pull measurements**.

Outline

Outline

RF Multipole Concept

RF Multipole Concept
similar to
Static Multipole treatment in the Magnet Community

Fields in the aperture of accelerator magnets

- Fourier coefficients,
- field harmonics, or
- multipole coefficients.

RF Multipole Concept

RF Multipole Concept
similar to
Static Multipole treatment in the Magnet Community

Fields in the aperture of accelerator magnets

described by

- Fourier coefficients,
- field harmonics, or
- multipole coefficients.

Magnetic Multipoles

Fourier expansion of the radial field components:

$$B_r(r_0,\phi) = \sum_{n=1}^{\infty} [B_n(r_0)\sin n\phi + A_n(r_0)\cos n\phi]$$

$$B_\phi(r_0,\phi) = \sum_{n=1}^{\infty} [B_n(r_0)\sin n\phi - A_n(r_0)\cos n\phi]$$

$$A_n(r_0) = \frac{1}{\pi}\int_0^{2\pi} B_r(r_0,\phi)\cos n\phi \approx \frac{2}{N}\sum_{k=0}^{N-1} B_r(r_0,\phi_k)\cos n\phi_k$$

$$B_n(r_0) = \frac{1}{\pi}\int_0^{2\pi} B_r(r_0,\phi)\sin n\phi \approx \frac{2}{N}\sum_{k=0}^{N-1} B_r(r_0,\phi)\sin n\phi_k$$

$$\phi_k = \frac{2\pi k}{N}$$

Magnetic Multipoles

Fourier expansion of the radial field components:

$$B_r(r_0,\phi) = \sum_{n=1}^{\infty} [B_n(r_0)\sin n\phi + A_n(r_0)\cos n\phi]$$

$$B_\phi(r_0,\phi) = \sum_{n=1}^{\infty} [B_n(r_0)\sin n\phi - A_n(r_0)\cos n\phi]$$

$$A_n(r_0) = \frac{1}{\pi}\int_0^{2\pi} B_r(r_0,\phi)\cos n\phi \approx \frac{2}{N}\sum_{k=0}^{N-1} B_r(r_0,\phi_k)\cos n\phi_k$$

$$B_n(r_0) = \frac{1}{\pi}\int_0^{2\pi} B_r(r_0,\phi)\sin n\phi \approx \frac{2}{N}\sum_{k=0}^{N-1} B_r(r_0,\phi)\sin n\phi_k$$

$$\phi_k = \frac{2\pi k}{N}$$

RF Multipoles

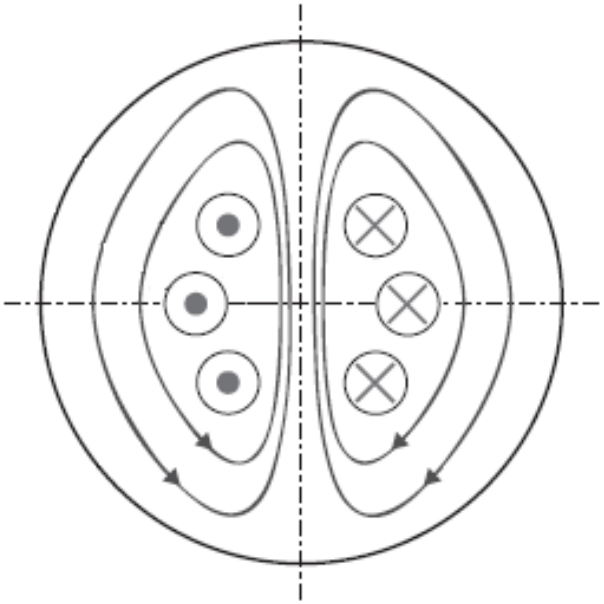

Main deflecting mode (TM_{110} mode) of an axially symmetric cavity:

- Only dipolar variation ($n = 1$)

As long as the cavity is far from axial symmetry...

- All the remaining multipolar components ($n > 1$) might be present!
- **Not only the desired dipolar kick, but also higher order kicks.**

RF Multipoles

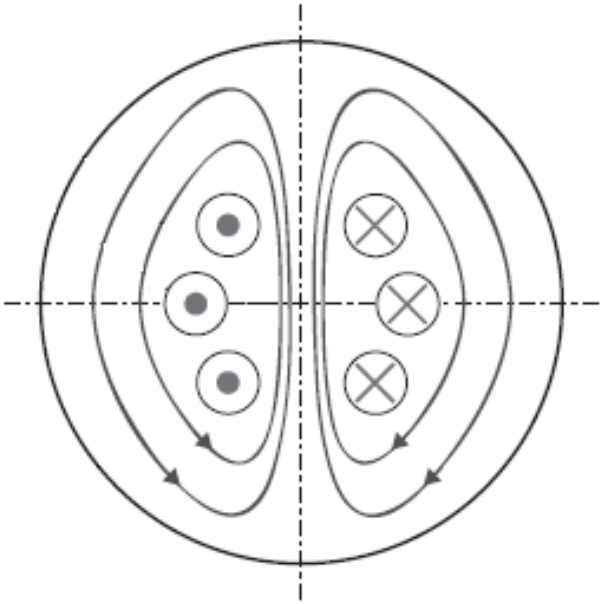

Main deflecting mode (TM_{110} mode) of an axially symmetric cavity:

- Only dipolar variation ($n = 1$)

As long as the cavity is far from axial symmetry...

- All the remaining multipolar components ($n > 1$) might be present!
- Not only the desired dipolar kick, but also higher order kicks.

RF Multipoles

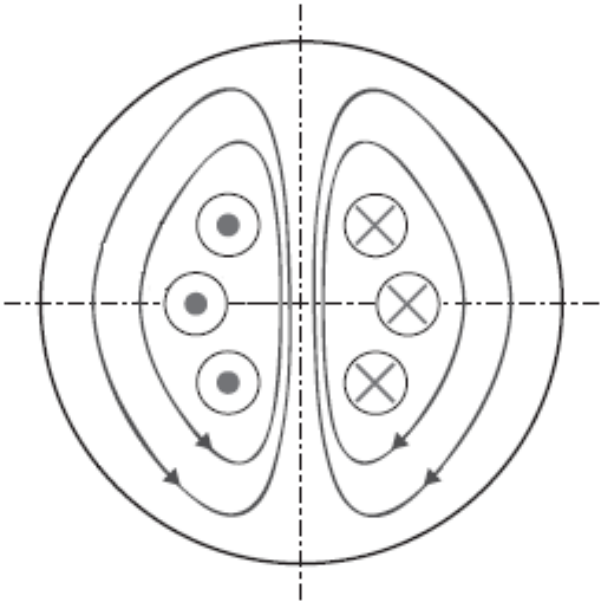

Main deflecting mode (TM_{110} mode) of an axially symmetric cavity:

- Only dipolar variation ($n = 1$)

As long as the cavity is far from axial symmetry...

- All the remaining multipolar components ($n > 1$) might be present!
- **Not only the desired dipolar kick, but also higher order kicks.**

RF Multipolar Kick Effects

Presence of RF multipolar kicks → **Beam dynamics perturbations**

The different perturbation depend on the order:

- Quadrupolar kick ($n=2$): Linear tune shift.
- Sextupolar kick ($n=3$): Chromaticity shift and coupling.
- Octupolar kick ($n=4$): Amplitude detuning.

Why do we care about multipoles in crab cavities?

Because of the beam size:

- At the location of CC is quite large (roughly 1 cm for 1σ in the transverse direction).
- At the interaction point is approx. 10 μm for 1σ.

RF Multipolar Kick Effects

Presence of RF multipolar kicks → **Beam dynamics perturbations**

The different perturbation depend on the order:

- Quadrupolar kick ($n=2$): Linear tune shift.
- Sextupolar kick ($n=3$): Chromaticity shift and coupling.
- Octupolar kick ($n=4$): Amplitude detuning.

Why do we care about multipoles in crab cavities?

Because of the beam size:

- At the location of CC is quite large (roughly 1 cm for 1σ in the transverse direction).
- At the interaction point is approx. 10 μm for 1σ.

RF Multipolar Kick Effects

Presence of RF multipolar kicks → **Beam dynamics perturbations**

The different perturbation depend on the order:

- Quadrupolar kick ($n=2$): Linear tune shift.
- Sextupolar kick ($n=3$): Chromaticity shift and coupling.
- Octupolar kick ($n=4$): Amplitude detuning.

Why do we care about multipoles in crab cavities?

Because of the beam size:

- At the location of CC is quite large (roughly 1 cm for 1σ in the transverse direction).
- At the interaction point is approx. 10 μm for 1σ.

Transverse RF Kicks

Transverse RF kicks:

1. **Lorentz force**

$$\Delta p_\perp(r,\phi) = \frac{1}{v_z}\int_0^L F_\perp \,\mathrm{d}z = \frac{q}{c}\int_0^L [E_\perp + v_z \times B_\perp]\,\mathrm{d}z$$

2. **Panofsky-Wenzel theorem**

$$\Delta p_\perp(r,\phi) = \frac{jq}{\omega}\int_0^L \nabla_\perp E_{acc}(r,\phi,z)\,\mathrm{d}z,$$

where $E_{acc} = E_z e^{jkz}$ is the accelerating field.

Assumptions made valid for the LHC:

- The particle is moving parallel to the z axis,
- at the speed of light.

Transverse RF Kicks

Transverse RF kicks:

1. **Lorentz force**

$$\Delta p_\perp(r,\phi) = \frac{1}{v_z}\int_0^L F_\perp \,\mathrm{d}z = \frac{q}{c}\int_0^L [E_\perp + v_z \times B_\perp]\,\mathrm{d}z$$

2. **Panofsky-Wenzel theorem**

$$\Delta p_\perp(r,\phi) = \frac{jq}{\omega}\int_0^L \nabla_\perp E_{acc}(r,\phi,z)\,\mathrm{d}z,$$

where $E_{acc} = E_z e^{jkz}$ is the accelerating field.

Assumptions made valid for the LHC:

- The particle is moving parallel to the z axis,
- at the speed of light.

Transverse RF Kicks

Transverse RF kicks:

1. **Lorentz force**

$$\Delta p_\perp(r,\phi) = \frac{1}{v_z}\int_0^L F_\perp \,\mathrm{d}z = \frac{q}{c}\int_0^L [E_\perp + v_z \times B_\perp]\,\mathrm{d}z$$

2. **Panofsky-Wenzel theorem**

$$\Delta p_\perp(r,\phi) = \frac{jq}{\omega}\int_0^L \nabla_\perp E_{acc}(r,\phi,z)\,\mathrm{d}z,$$

where $E_{acc} = E_z e^{jkz}$ is the accelerating field.

Assumptions made valid for the LHC:

- The particle is moving parallel to the z axis,
- at the speed of light.

RF Multipoles versus Magnetic Multipoles

Magnetic multipoles

- Static.
- Kick non-dependent on the longitudinal position of particles.

RF multipoles

- Harmonically oscillating (ω_{RF}).
- Kick does depend on the RF phase of the particle.

Equating the RF and magnetic multipoles...

$$B_{\perp}^{(n)} = \frac{1}{qc} F_{\perp}^{(n)} = \frac{nj}{\omega} E_{acc}^{(n)} \qquad [Tm/m^n]$$

The RF kick coefficients...

$$b_n = \int_0^L B_{\perp}^{(n)} \, \mathrm{d}z \in \mathbb{C} \qquad [Tm/m^{n-1}]$$

RF Multipoles versus Magnetic Multipoles

Magnetic multipoles

- Static.
- Kick non-dependent on the longitudinal position of particles.

RF multipoles

- Harmonically oscillating (ω_{RF}).
- Kick does depend on the RF phase of the particle.

Equating the RF and magnetic multipoles...

$$B_{\perp}^{(n)} = \frac{1}{qc} F_{\perp}^{(n)} = \frac{nj}{\omega} E_{acc}^{(n)} \qquad [Tm/m^n]$$

The RF kick coefficients...

$$b_n = \int_0^L B_{\perp}^{(n)} \, \mathrm{d}z \in \mathbb{C} \qquad [Tm/m^{n-1}]$$

RF Multipoles versus Magnetic Multipoles

Magnetic multipoles

- Static.
- Kick non-dependent on the longitudinal position of particles.

RF multipoles

- Harmonically oscillating (ω_{RF}).
- Kick does depend on the RF phase of the particle.

Equating the RF and magnetic multipoles...

$$B_{\perp}^{(n)} = \frac{1}{qc} F_{\perp}^{(n)} = \frac{nj}{\omega} E_{acc}^{(n)} \qquad [Tm/m^n]$$

The RF kick coefficients...

$$b_n = \int_0^L B_{\perp}^{(n)} \, \mathrm{d}z \in \mathbb{C} \qquad [Tm/m^{n-1}]$$

Outline

Mesh Definition and Simulation Setup

- Mesh in the vicinity of the beam axis:
  7 mm for $r < 20$ mm
  15 mm for $r < 30$ mm
- Surface approx. $\backsim$ 1mm
- Curvilinear elements
- Second order basis functions
- # tetrahedra $\backsim 3.8\,10^5$
- Server: 1.00 TB of RAM, 4 processors @ 2.67 GHz
- Simulation time $\backsim 6 - 12$ h

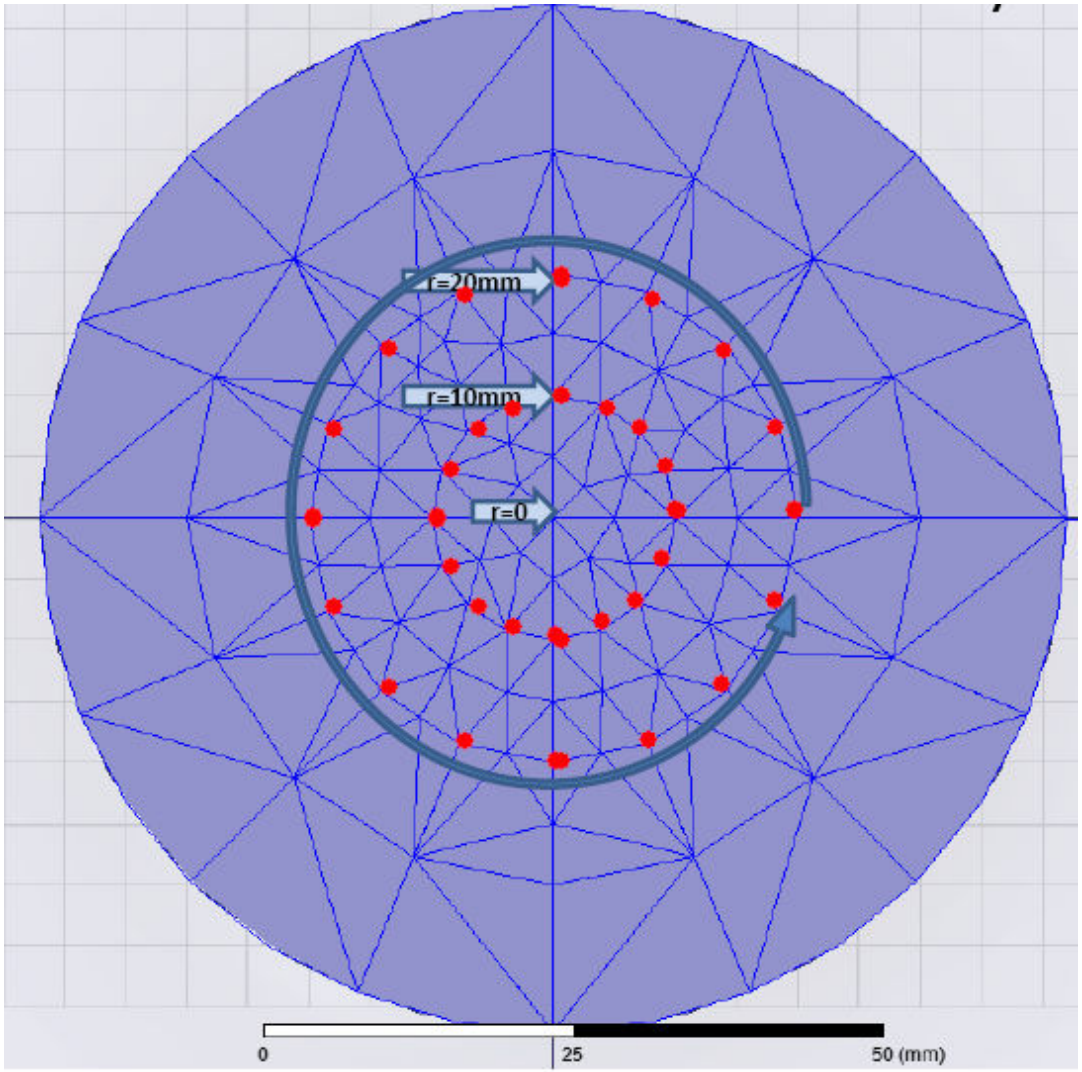

A. Grudiev

Mesh Definition and Simulation Setup

- Mesh in the vicinity of the beam axis:
  7 mm for $r < 20$ mm
  15 mm for $r < 30$ mm
- Surface approx. $\backsim$ 1mm
- Curvilinear elements
- Second order basis functions

- # tetrahedra $\backsim 3.8\,10^5$
- Server: 1.00 TB of RAM, 4 processors @ 2.67 GHz
- Simulation time $\backsim 6 - 12$ h

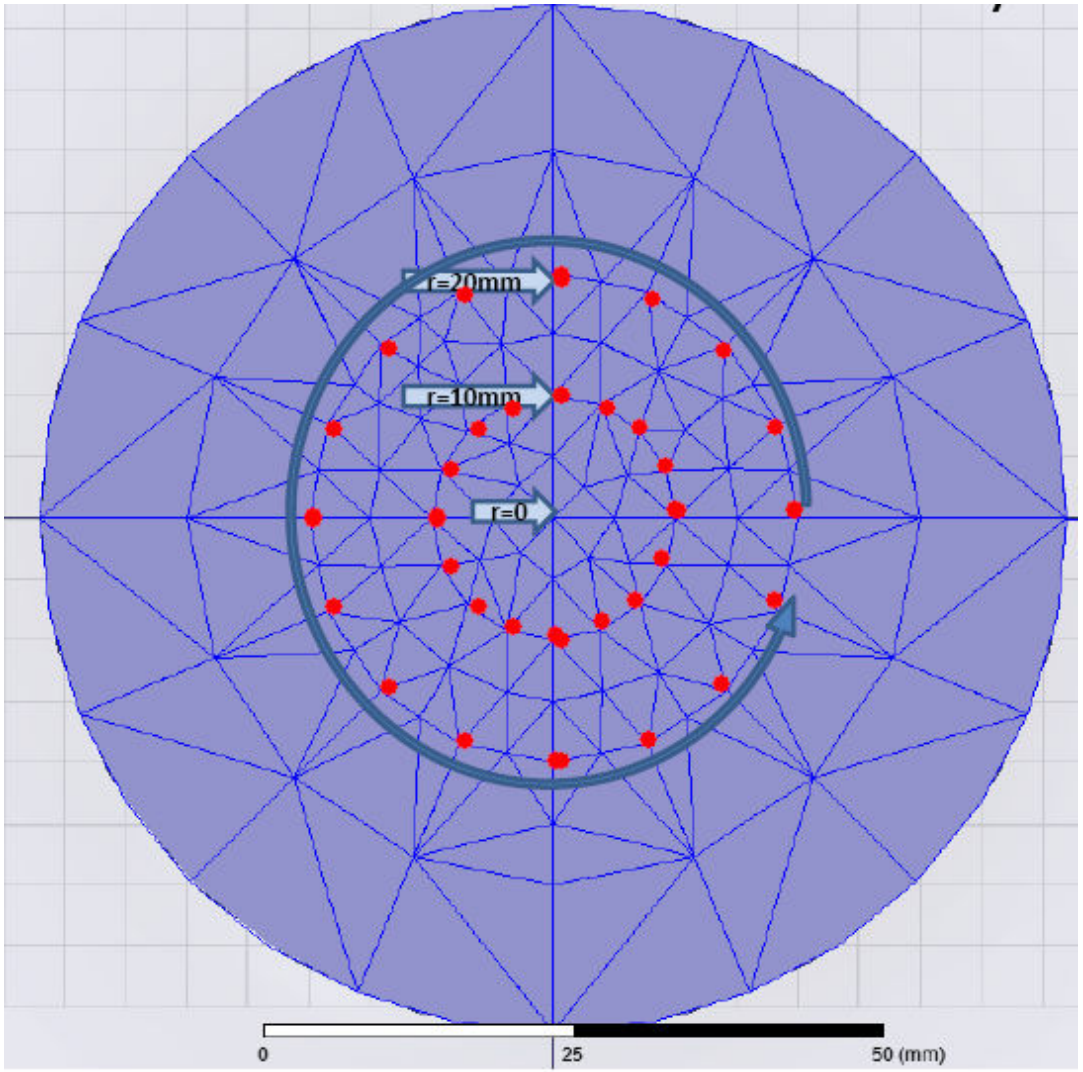

A. Grudiev

Mesh Definition and Simulation Setup

- Mesh in the vicinity of the beam axis:
  7 mm for $r < 20$ mm
  15 mm for $r < 30$ mm
- Surface approx. $\backsim$ 1mm
- Curvilinear elements
- Second order basis functions

- # tetrahedra $\backsim 3.8\,10^5$
- Server: 1.00 TB of RAM, 4 processors @ 2.67 GHz
- Simulation time $\backsim 6 - 12$ h

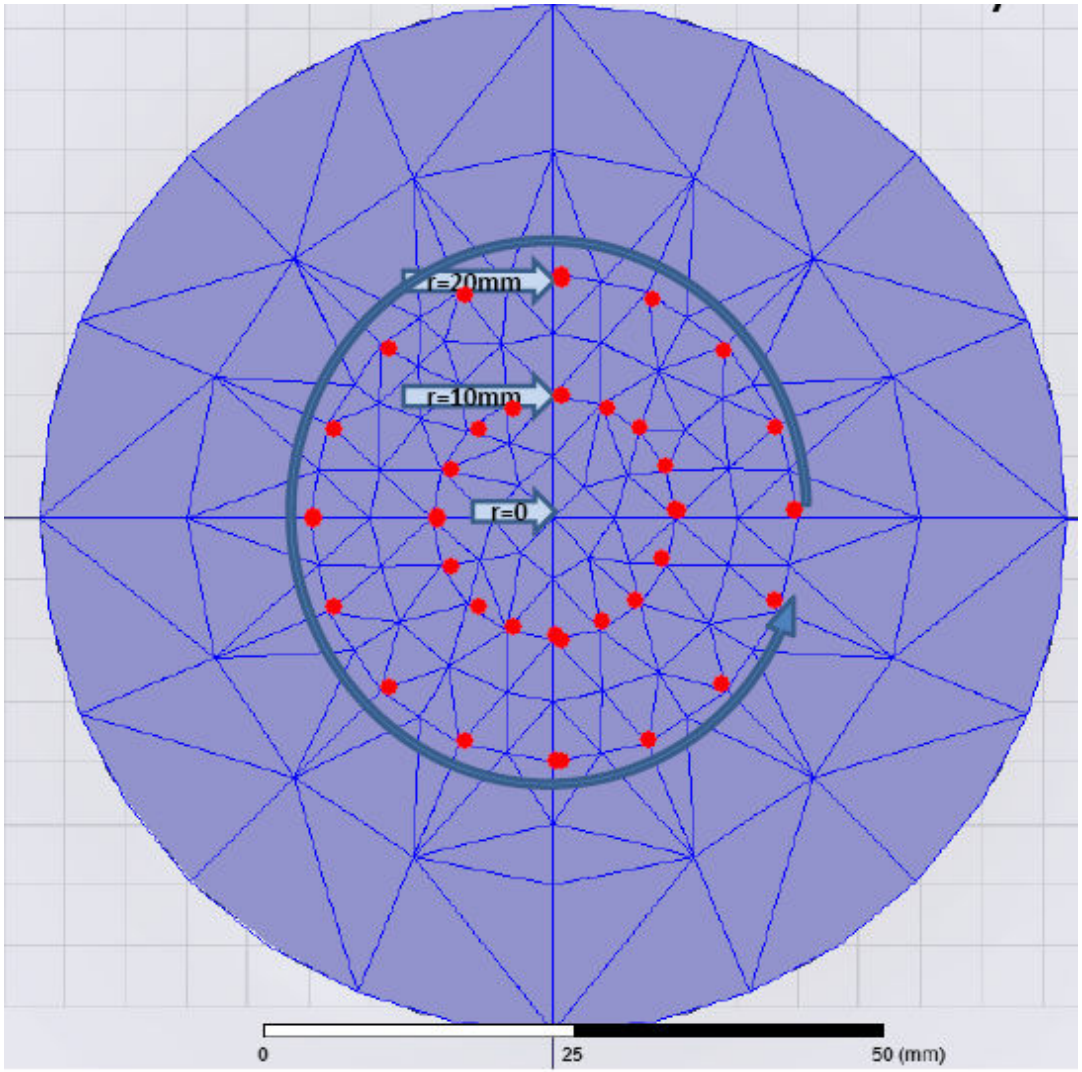

A. Grudiev

Multipolar Kicks for the Latest Geometries

2012 updated geometries

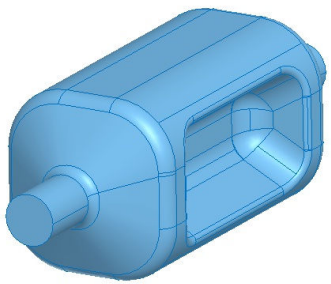

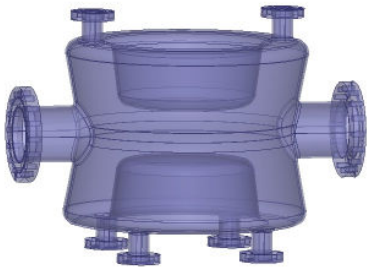

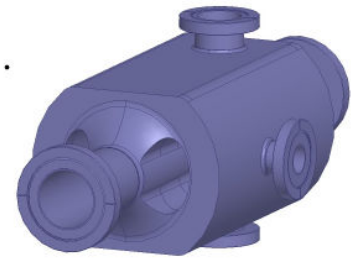

* No couplers yet

	RF Dipole		$\frac{1}{4}$-wave		4-rod	
$V_x = 10$ MV	$\Re(b_2)$	$\Im(b_2)$	$\Re(b_3)$	$\Im(b_3)$	$\Re(b_4)$	$\Im(b_4)$
$b_2[mTm/m]$	0	0	0	0	0	0
$b_3[mTm/m^2]$	4500	0	1100	0	1160	0
$b_4[mTm/m^3]$	0	0	0	0	0	0

Tolerance Studies

How imperfections in the manufacturing may affect the performance of the cavity

Preliminar studies on the 1/4-wave cavity without ports

Tolerance Studies

How imperfections in the manufacturing may affect the performance of the cavity

Preliminar studies on the 1/4-wave cavity without ports

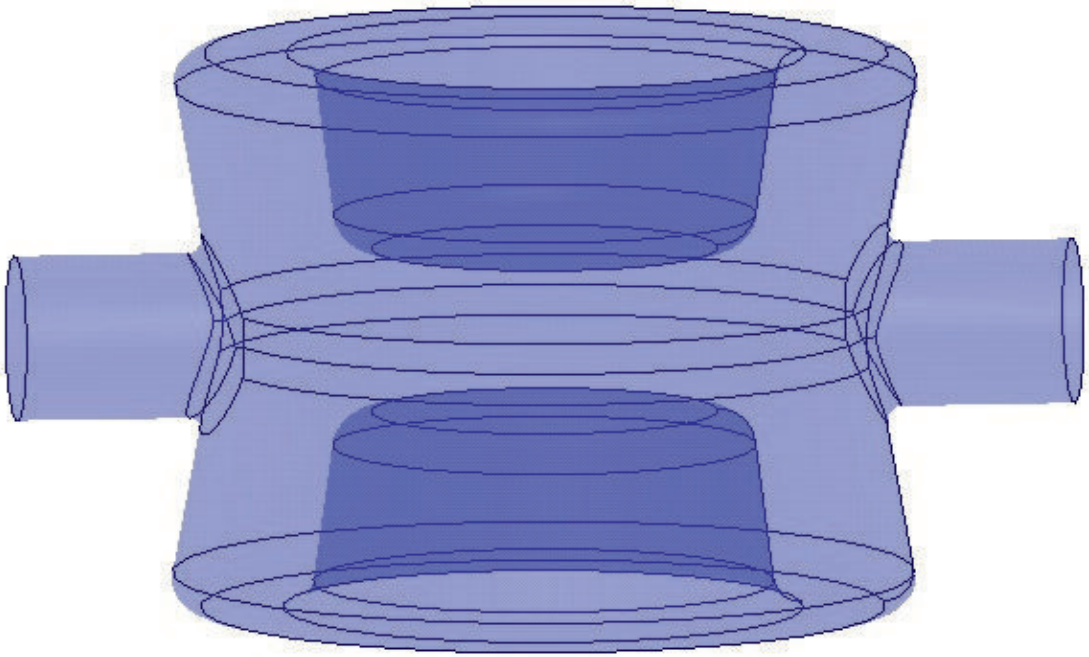

Tuning the height of one plate

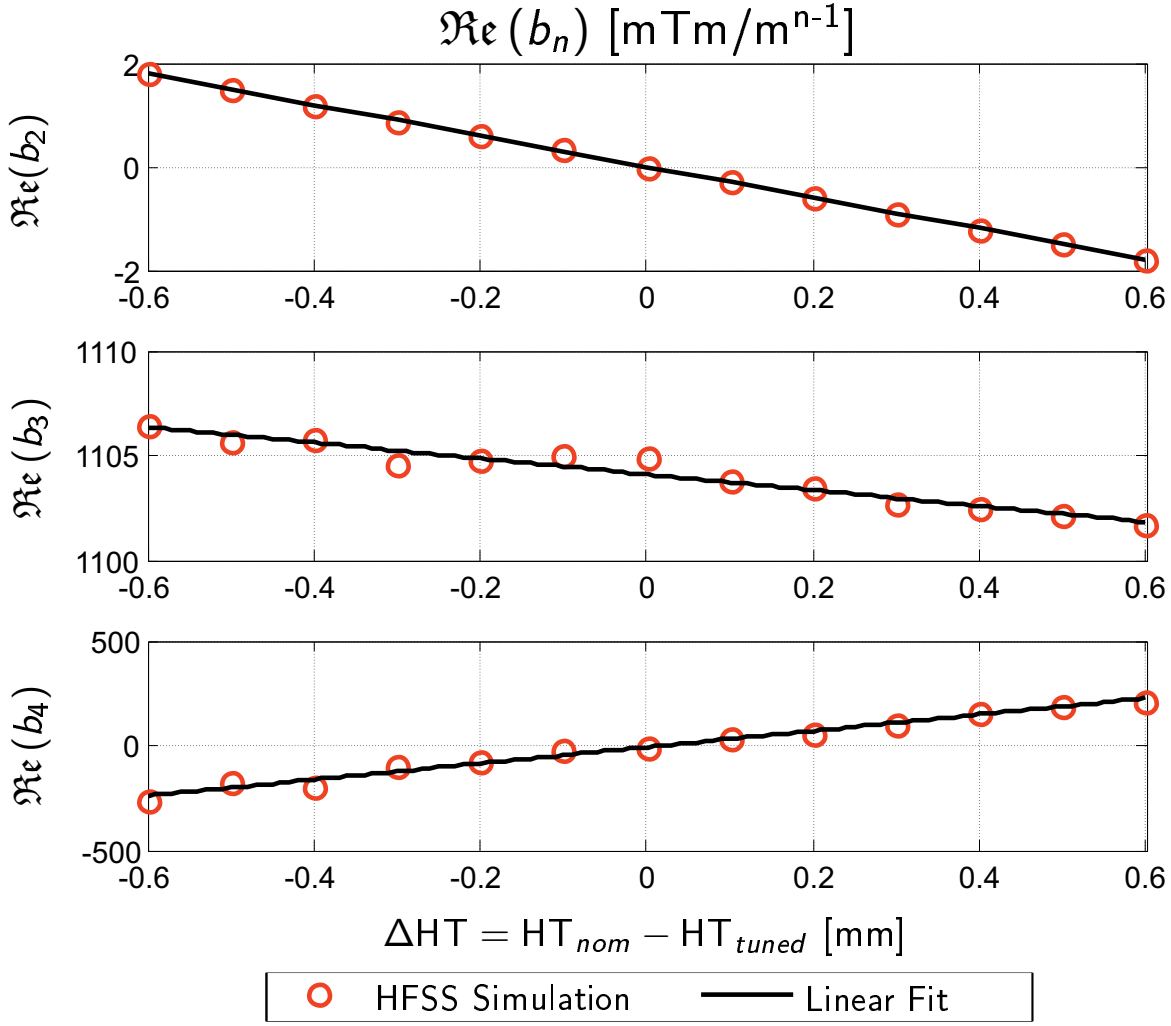

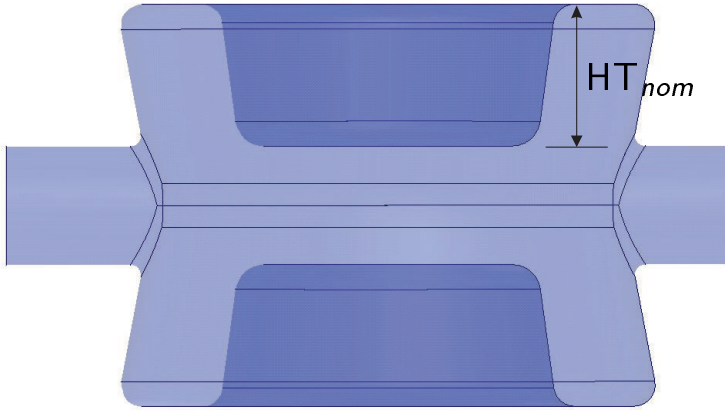

Outline

Cavity Measurements

Ultimate Aim

Experimental verification of the **RF multipolar components** for the crab cavities under study, by means of **bead-pull measurements**.

Bead-Pull Measurements

- Examine the EM field inside a cavity during low-power tests.
- Based on the Slater Perturbation theory:

$$\frac{\Delta\omega}{\omega_0} \propto \frac{\int_{\Delta V}(\Delta\mu_0 H^2 + \Delta\varepsilon_0 E^2)\,\mathrm{d}V}{\int_V(\mu_0 H^2 + \varepsilon_0 E^2)\,\mathrm{d}V}$$

Cavity Measurements

Ultimate Aim

Experimental verification of the **RF multipolar components** for the crab cavities under study, by means of **bead-pull measurements**.

Bead-Pull Measurements

- Examine the EM field inside a cavity during low-power tests.
- Based on the Slater Perturbation theory:

$$\frac{\Delta\omega}{\omega_0} \propto \frac{\int_{\Delta V}(\Delta\mu_0 H^2 + \Delta\varepsilon_0 E^2)\,\mathrm{d}V}{\int_V(\mu_0 H^2 + \varepsilon_0 E^2)\,\mathrm{d}V}$$

Typical Bead-Pull System

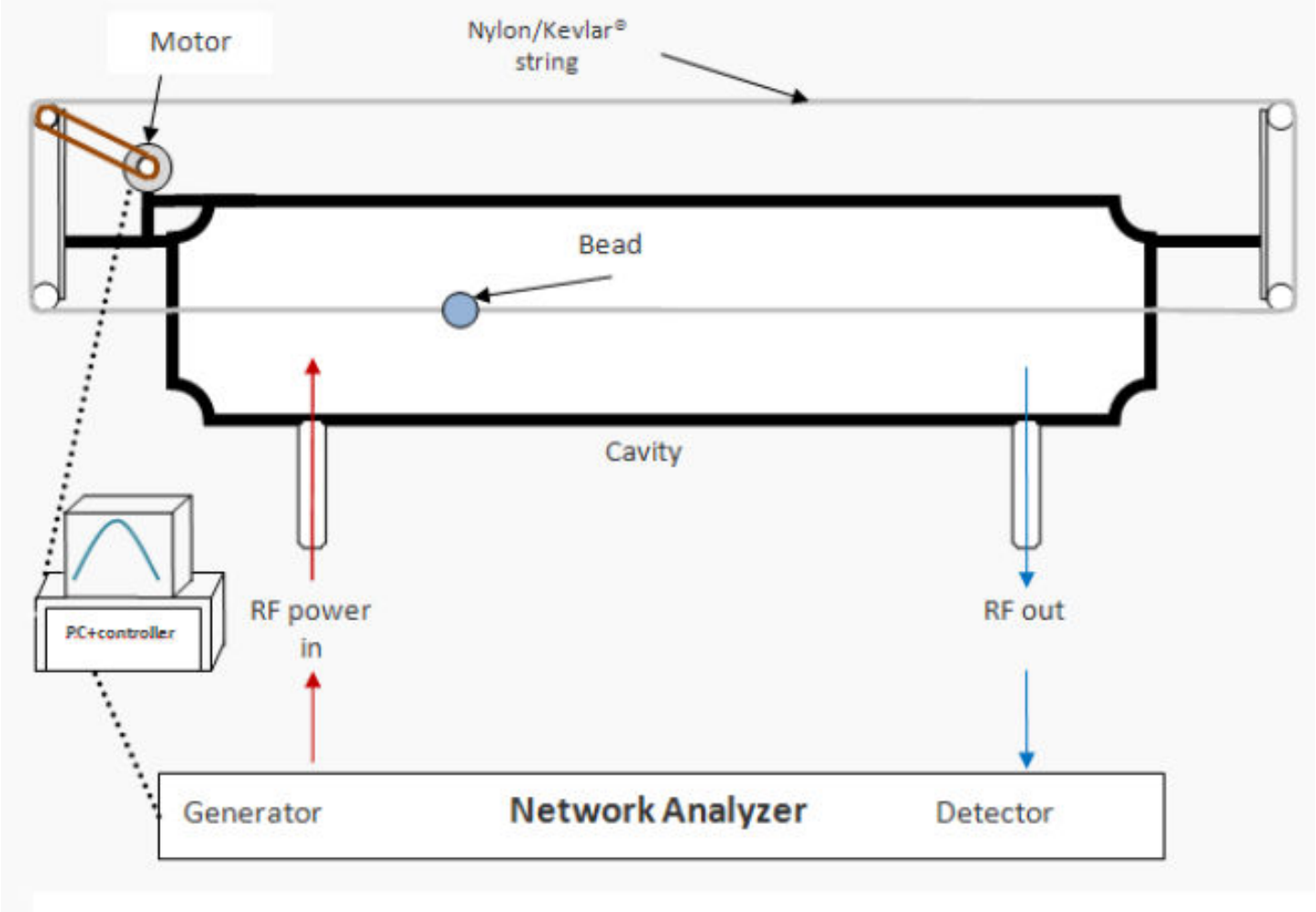

Source: Michal Jarosz, "Bead-Pull Measurements", CERN project report.

RF Multipole Bead-Pull Measurements

Customarily used to measure the on-axis E field in accelerating cavities.

Our requirements

- Rather than in the fundamental field distribution, we are interested in the higher order components.
- Need to carry out off-axis measurements.
- Rotational degree of freedom needed.

RF Multipole Bead-Pull Measurements

Customarily used to measure the on-axis E field in accelerating cavities.

Our requirements

- Rather than in the fundamental field distribution, we are interested in the higher order components.
- Need to carry out off-axis measurements.
- Rotational degree of freedom needed.

RF Multipole Bead-Pull Measurements

Customarily used to measure the on-axis E field in accelerating cavities.

Our requirements

- Rather than in the fundamental field distribution, we are interested in the higher order components.
- Need to carry out off-axis measurements.
- Rotational degree of freedom needed.

RF Multipole Bead-Pull Measurements

Customarily used to measure the on-axis E field in accelerating cavities.

Our requirements

- Rather than in the fundamental field distribution, we are interested in the higher order components.
- Need to carry out off-axis measurements.
- Rotational degree of freedom needed.

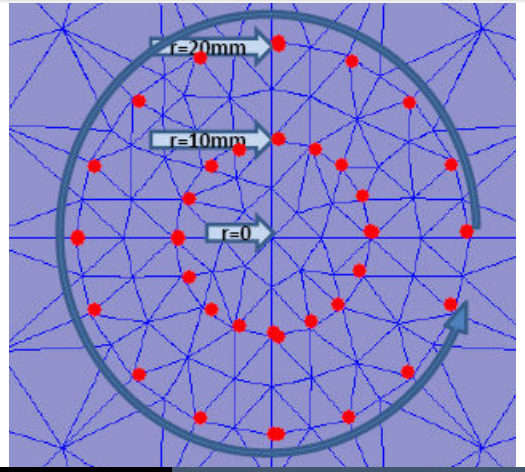

RF Multipole Bead-Pull Measurements

Customarily used to measure the on-axis E field in accelerating cavities.

Our requirements

- Rather than in the fundamental field distribution, we are interested in the higher order components.
- Need to carry out off-axis measurements.
- Rotational degree of freedom needed.

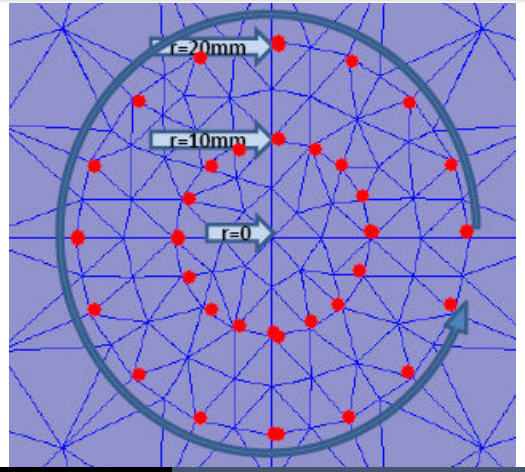

RF Multipole Bead-Pull Measurements

Bead-Pull Requirements

- Versatile for the measurements of the 3 different crab cavities.
- Capacity to position the bead along a circumference path.
- Ensure great stability to warranty high-precision measurements.
- Avoid the sagging of the bead.

Bead-Pull Solutions

- Inclusion of linear slides to cover all the points for each transverse plane.
- Stable bead-pull bench to avoid vibration.
- Place the cavity vertically to pull the bead vertically too.

RF Multipole Bead-Pull Measurements

Bead-Pull Requirements

- Versatile for the measurements of the 3 different crab cavities.
- Capacity to position the bead along a circumference path.
- Ensure great stability to warranty high-precision measurements.
- Avoid the sagging of the bead.

Bead-Pull Solutions

- Inclusion of linear slides to cover all the points for each transverse plane.
- Stable bead-pull bench to avoid vibration.
- Place the cavity vertically to pull the bead vertically too.

RF Multipole Bead-Pull Measurements

Bead-Pull Requirements

- Versatile for the measurements of the 3 different crab cavities.
- Capacity to position the bead along a circumference path.
- Ensure great stability to warranty high-precision measurements.
- Avoid the sagging of the bead.

Bead-Pull Solutions

- Inclusion of linear slides to cover all the points for each transverse plane.
- Stable bead-pull bench to avoid vibration.
- Place the cavity vertically to pull the bead vertically too.

RF Multipole Bead-Pull Measurements

Bead-Pull Requirements

- Versatile for the measurements of the 3 different crab cavities.
- Capacity to position the bead along a circumference path.
- Ensure great stability to warranty high-precision measurements.
- Avoid the sagging of the bead.

Bead-Pull Solutions

- Inclusion of linear slides to cover all the points for each transverse plane.
- Stable bead-pull bench to avoid vibration.
- Place the cavity vertically to pull the bead vertically too.

Latest Idea for Bead-Pull Bench

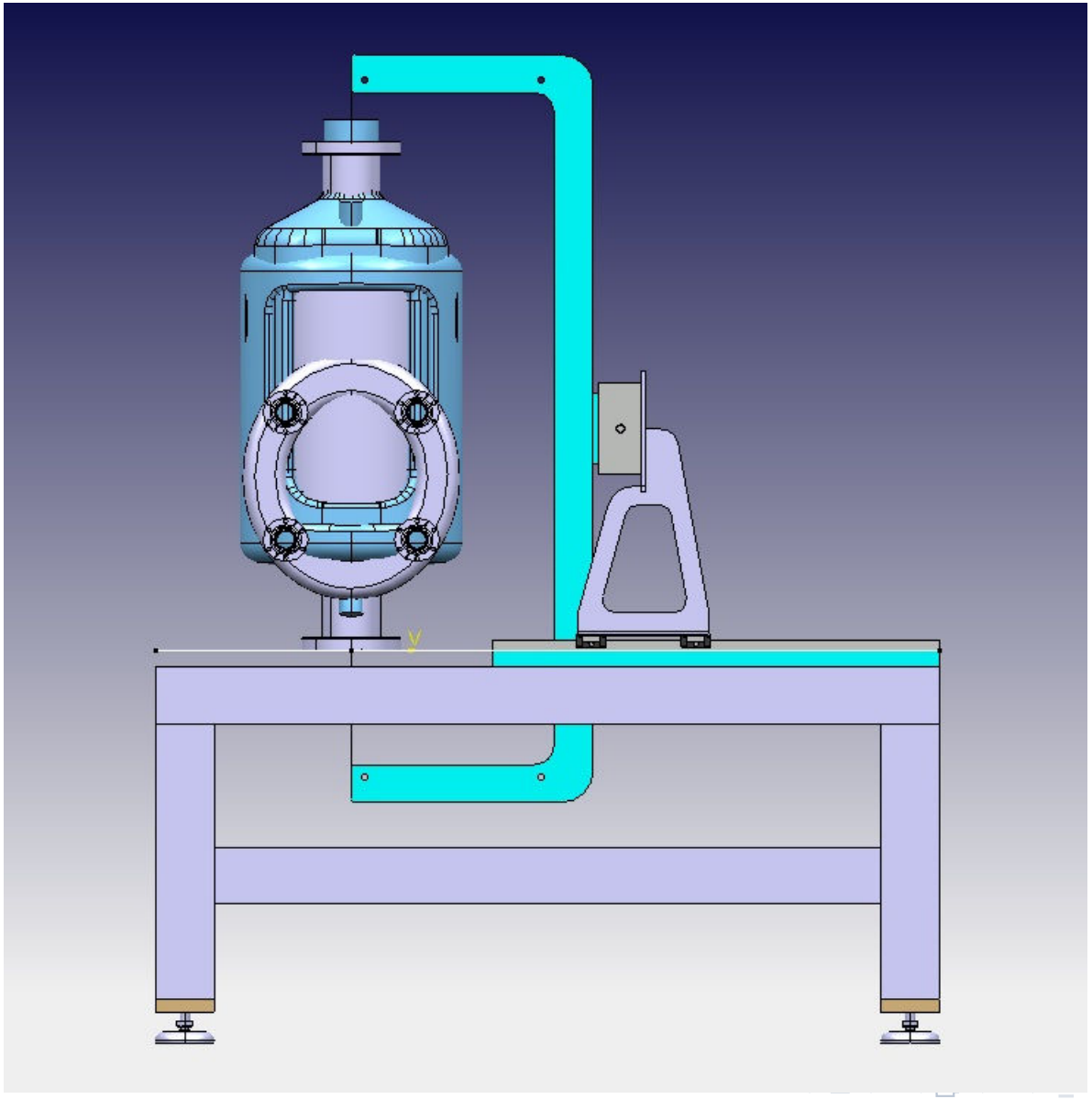

Latest Idea for Bead-Pull Bench

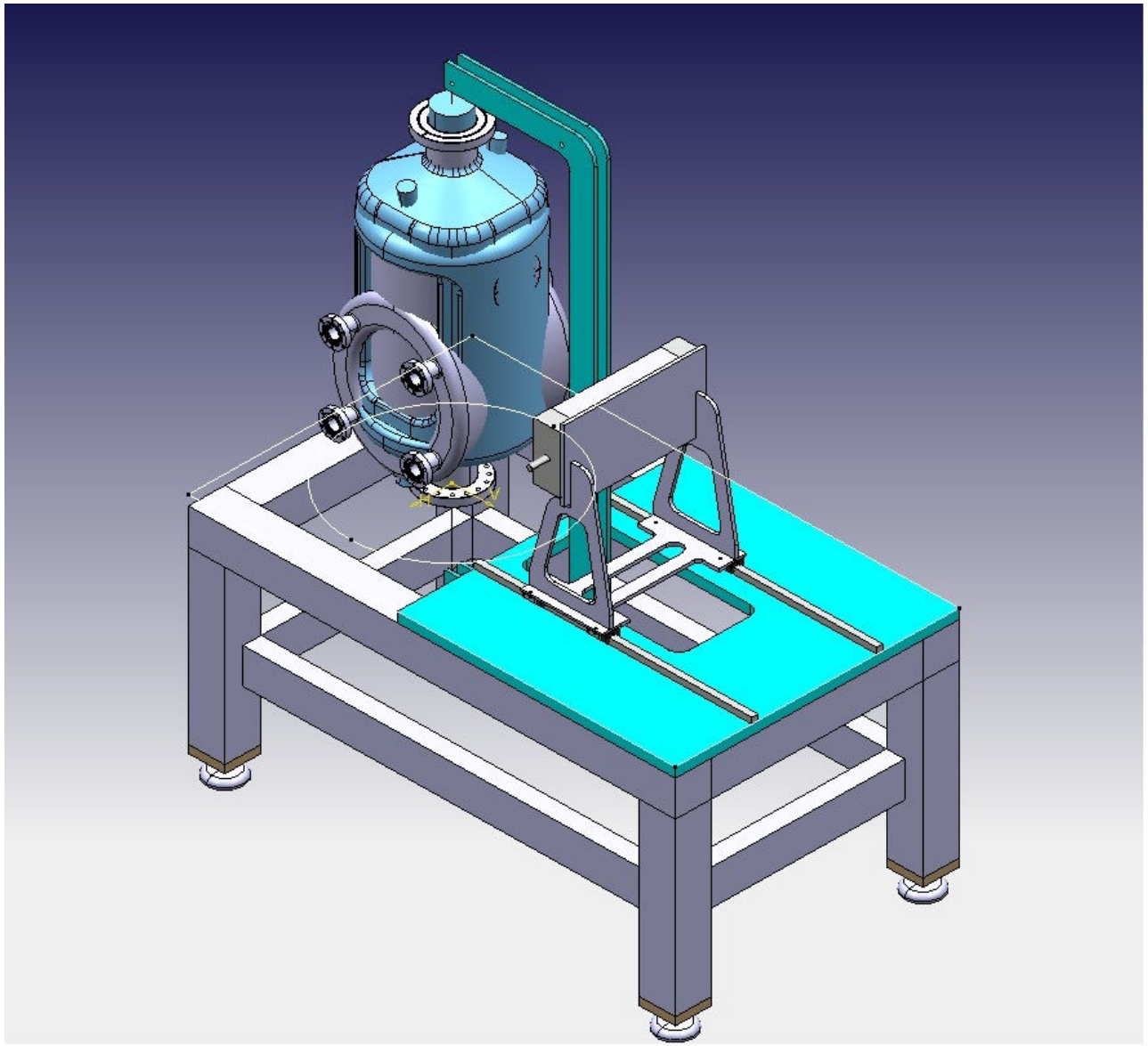

Outline

Summary and conclusions

- Three different cavities (**RF dipole, 1/4-wave and 4-rod**) have been studied for the **higher-order multipole** viewpoint.
- A **tolerance study** is ongoing on for the 1/4-wave cavity to assess the sensitivity of the current design to errors in the manufacturing.
- A **bead-pull** setup is being considered for having experimental evidence of the multipole coefficients.

Summary and conclusions

- Three different cavities (**RF dipole, 1/4-wave and 4-rod**) have been studied for the **higher-order multipole** viewpoint.
- A **tolerance study** is ongoing on for the 1/4-wave cavity to assess the sensitivity of the current design to errors in the manufacturing.
- A **bead-pull** setup is being considered for having experimental evidence of the multipole coefficients.

Summary and conclusions

- Three different cavities (**RF dipole, 1/4-wave and 4-rod**) have been studied for the **higher-order multipole** viewpoint.
- A **tolerance study** is ongoing on for the 1/4-wave cavity to assess the sensitivity of the current design to errors in the manufacturing.
- A **bead-pull** setup is being considered for having experimental evidence of the multipole coefficients.

Acknowledgements

The HiLumi LHC Design Study (a sub-system of HL-LHC) is cofunded by the European Commission within the Framework Programme 7 Capacities Specific Programme, Grant Agreement 284404

Many thanks to L. Alberty and F. Pillon.

Radiofrequency Multipoles in LHC Crab Cavities

María Navarro-Tapia Alexej Grudiev Rama Calaga

Radiofrequency Group, Beams Department
CERN, Geneva (Switzerland)

Fourth RFTech Workshop