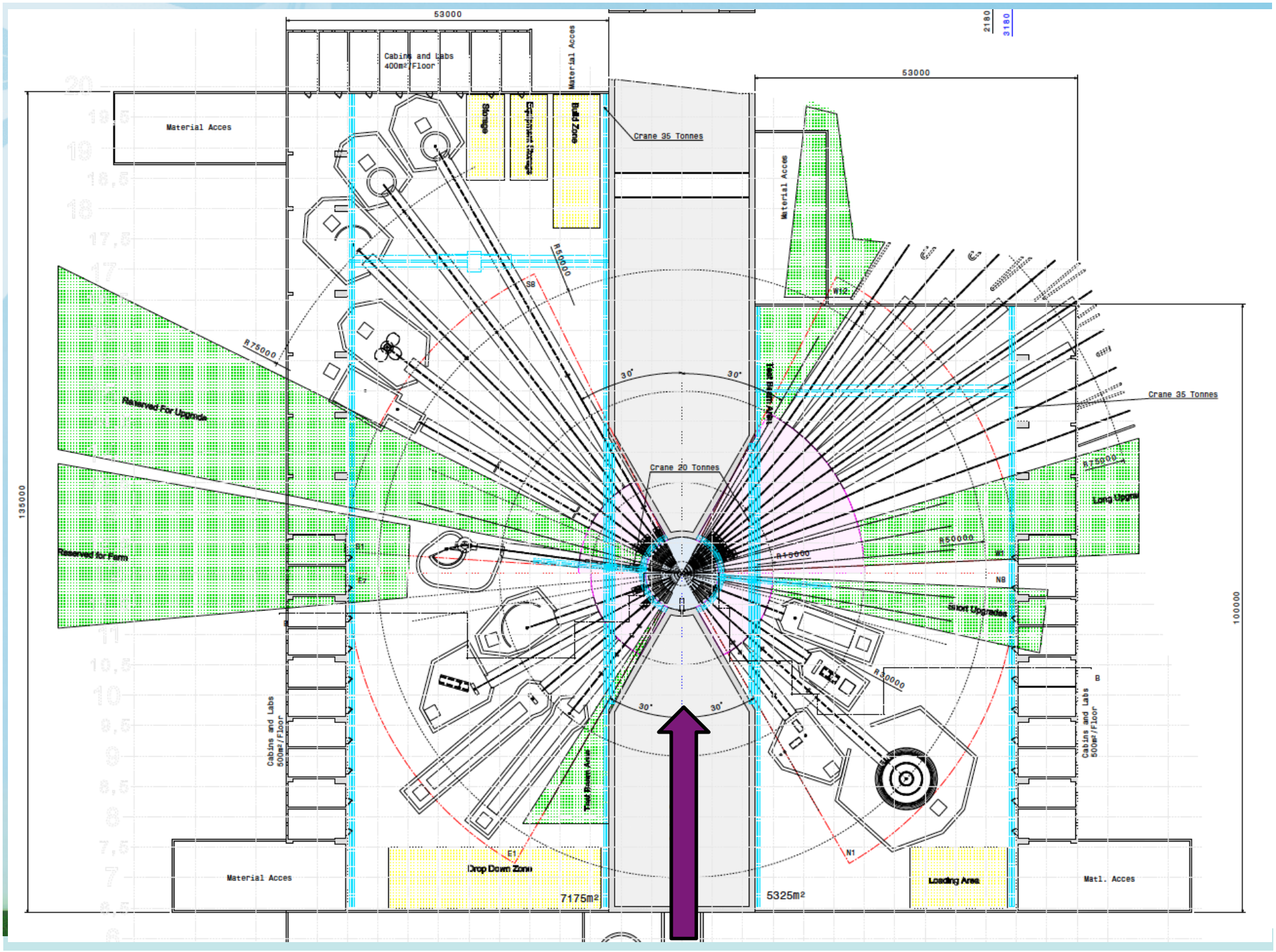
53000
Cabins and Labs
400m²/Floor
Material Acces
Storage
Equipment Storage
Build Zone
Crane 35 Tonnes
Material Acces
53000
2180
3180
Material Acces
R50000
S8
W12
R75000
30°
30°
Test Bench Area
Crane 35 Tonnes
Reserved For Upgrade
Crane 20 Tonnes
R75000
Long Upgrade
R50000
R15000
Reserved for Farm
S1
S2
N2
N8
Short Upgrades
R30000
B
133000
100000
30°
30°
Cabins and Labs
500m²/Floor
Test Bench Area
Cabins and Labs
500m²/Floor
E1
N1
Material Acces
Drop Down Zone
7175m²
5325m²
Loading Area
Matl. Acces
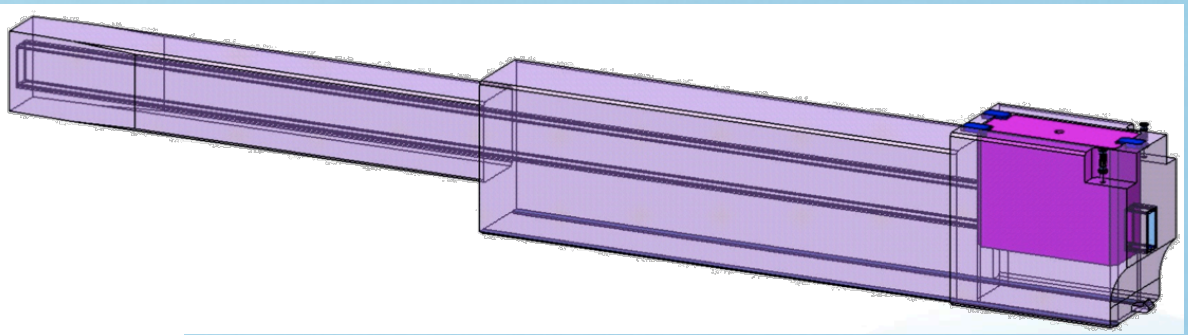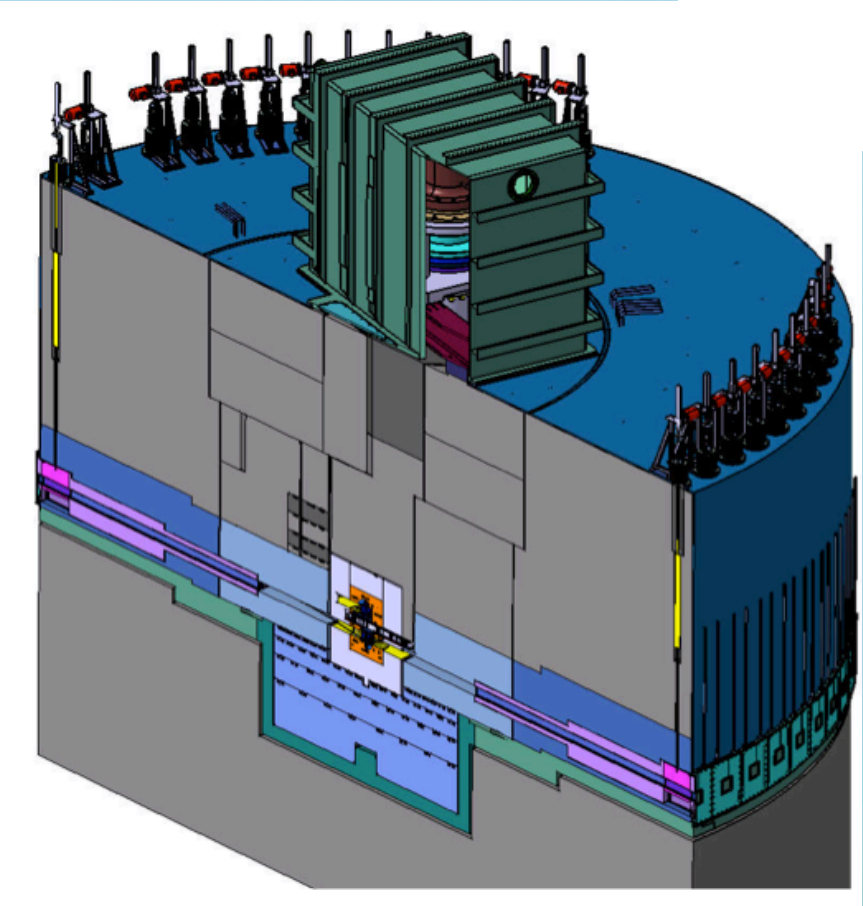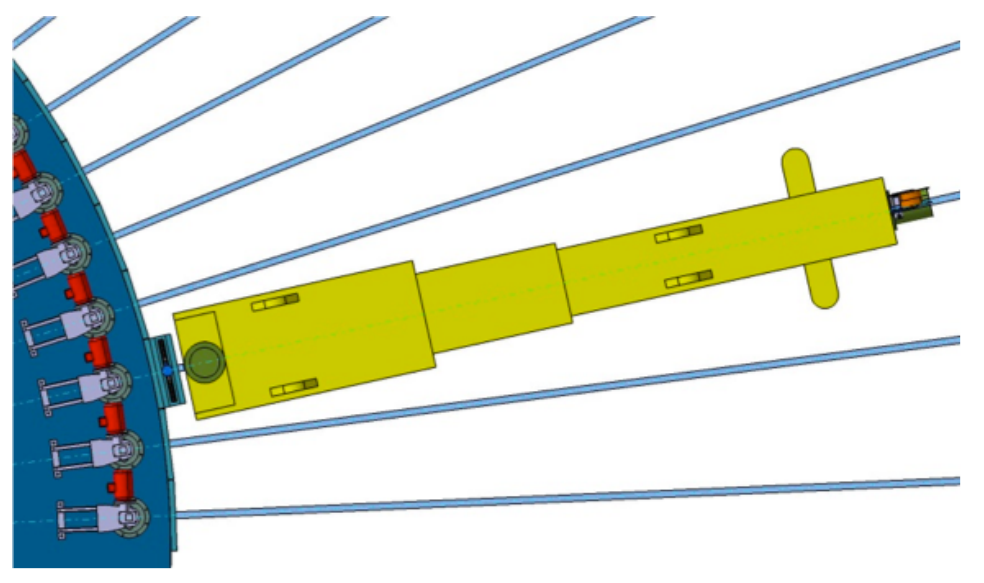
Beam Extraction – current baseline